Teletek electronics

ENGINEER PROGRAMMING MANUAL

ECLIPSE 8

(S.W. 1.80)

ECLIPSE 32

(S.W. 1.80)

ALARM CONTROL PANELS

Attention:
This manual contains information on limitations regarding product use and function and information on the limitations as to liability of the manufacturer. The entire manual should be carefully read.

The information in this manual is a subject to change without notice!

CE

Table of Contents:

1. GENERAL INFORMATION 4

2. SUPPORTED KEYBOARDS FOR PROGRAMMING AND OPERATION 7
- 2.1. LED/LCD Keyboards 7
- 2.2 Sound Signalization from the Keyboards 8
- 2.3. Supported Trouble Events in ECLIPSE Series 8
- 2.4. Buttons Functions 9
- 2.5. General Information for Operation with LED8 10
- 2.6. General Information for Operation with LED16 and LED32 12
- 2.7. General Information for Operation with LCD Keyboard 13
- 2.8. Entering text for LCD Keyboard 13

3. PROGRAMMING WITH SPECIALIZED ProsTE SOFTWARE 14

4. OPERATION WITH A SERVICE KEYBOARD 15

5. ENROLLING / DELETING OF DEVICES 15
- 5.1. Enrolling Devices during the Initial Start-up of the Control Panel 15
- 5.2. Enrolling Devices to a working system configuration via LCD keyboard 16
- 5.3. Enrolling Devices to a working system configuration via LED keyboard 17
- 5.4 Deleting of a device from the system configuration 17

6. ENGINEER PROGRAMMING 17
- 6.1 Organization of the Engineer Programming Menus 18
- 6.2 Indication 18
- 6.3 Special Symbols 19

7. ENGINEER MENUS – Programming Tables 20
- 0. General Settings 20
- 1. Users 28
- 2. Zones 33
- 3. PGM Outputs 45
- 4. Areas 54
- 5. Timeslots 61
- 6. Communicator 64
- 6.1 General Parameters 65
- 6.2 Remote programming 69
- 8. Peripheral Devices 71

APPENDIX 76
- A. Structure of zone inputs on the ECLIPSE 32 control panel 76
- B. Memory LOG Events 76
- C. FIRE DELAY Operation Algorithm (ADDRESS 2015) 79
- D. Text Tree-Structure Menus 80
- E. Style Diagrams for Zone Connection 89
- F. ECLIPSE Series Control Panels – Main board Connection Diagrams 91

GUARANTEE

The guarantee terms are determined by the serial number (barcode) of the electronic device!
During the guarantee period the manufacturer shall, at its sole discretion, replace or repair any defective product when it is returned to the factory. All parts replaced and/or repaired shall be covered for the remainder of the original guarantee, or 6 months, whichever period is longer. The original purchaser shall immediately send manufacturer a written notice of the defective parts or workmanship.

INTERNATIONAL GUARANTEE

Foreign customers shall possess the same guarantee rights as those any customer in Bulgaria, except that manufacturer shall not be liable for any related customs duties, taxes or VAT, which may be payable.

GUARANTEE PROCEDURE

The guarantee will be granted when the appliance in question is returned. The guarantee period and the period for repair are determined in advance. The manufacturer shall not accept any product, of which no prior notice has been received via the RAN form at: http://www.teletek-electronics.com/en/support/Service
The setup and programming included in the technical documentation shall not be regarded as defects. Teletek Electronics bears no responsibility for the loss of programming information in the device being serviced.

CONDITIONS FOR WAIVING THE GUARANTEE

This guarantee shall apply to defects in products resulting only from improper materials or workmanship, related to its normal use. It shall not cover:

- Devices with destroyed serial number (barcode);
- Damages resulting from improper transportation and handling;
- Damages caused by natural calamities, such as fire, floods, storms, earthquakes or lightning;
- Damages caused by incorrect voltage, accidental breakage or water; beyond the control of the manufacturer;
- Damages caused by unauthorized system incorporation, changes, modifications or surrounding objects;
- Damages caused by peripheral appliances unless such peripheral appliances have been supplied by the manufacturer;
- Defects caused by inappropriate surrounding of installed products;
- Damages caused by failure to use the product for its normal purpose;
- Damages caused by improper maintenance;
- Damages resulting from any other cause, bad maintenance or product misuse.

In the case of a reasonable number of unsuccessful attempts to repair the product, covered by this guarantee, the manufacturer's liability shall be limited to the replacement of the product as sole compensation for breach of the guarantee. Under no circumstances shall the manufacturer be liable for any special, accidental or consequential damages, on the grounds of breach of guarantee, breach of agreement, negligence, or any other legal notion.

WAIVER

This Guarantee shall contain the entire guarantee and shall be prevailing over any and all other guarantees, explicit or implicit (including any implicit guarantees on behalf of the dealer, or adaptability to specific purposes), and over any other responsibilities or liabilities on behalf of the manufacturer. The manufacturer does neither agree, nor empower, any person, acting on his own behalf, to modify, service or alter this Guarantee, nor to replace it with another guarantee, or another liability with regard to this product.

UNWARRANTED SERVICES

The manufacturer shall repair or replace unwarranted products, which have been returned to its factory, at its sole discretion under the conditions below. The manufacturer shall accept no products for which no prior notice has been received via the RAN form at: http://www.teletek-electronics.com/en/support/Service .
The products, which the manufacturer deems repairable, will be repaired and returned. The manufacturer has prepared a price list and those products, which can be repaired, shall be paid for by the Customer. The devices with unwarranted services carry 6 month guarantee for the replaced parts.
The closest equivalent product, available at the time, shall replace the products, the manufacturer deems un-repairable. The current market price shall be charged for every replaced product.

STANDARDS AND CONFORMITY

The Eclipse Series control panels are designed according and with conformity to the European Union (EU) Low Voltage Directive (LVD) 2006/95/EC and Electro-Magnetic Compatibility (EMC) Directive 2004/108/EC.

The CE mark is placed for indication that the Eclipse Series control panels comply with the requirement of EU for safety, health, environmental and customer protection.

The Eclipse Series control panels are suitable for installation and operation in security systems specially designed to comply with standard EN 50131-1, grade 2.

1. GENERAL INFORMATION

ECLIPSE Series are control panels providing security and management of small and medium residential or office sites.

The ECLIPSE family includes:

- **ECLIPSE 8** for management of small sites up to 8 zones organized in 1 common area.
- **ECLIPSE 32** for management of medium sites up to 32 zones and 8 independent areas.

The programming of options, parameters and attributes is organized in menus and the engineer can choose among three programming styles according his preferences:

1. 4-digit addresses;
2. 3-digit operations;
3. Text menus (tree-structure).

The default programming style is the one using 4-digit addresses for the engineer menus. To change the programming style at the beginning you have to enter first the engineer menu with valid code at 0097 address:

7777 – 0097 - <programming style type: 1 (addresses), **2** (operations) or **3** (text)>

Press the digit button corresponding to the preferred programming style. Confirm your choice with ENTER button – the keyboard will confirm the operation with a long sound signal. The next entering in the engineer menu will be with the selected programming style.

For installer's convenience, the menus in this manual are presented with all programming styles as they are pointed at the head and the functionality in details is described in the table under it.

The engineer menus are available for programming only when the system is disarmed and the engineer access is enabled from the Manager programming menus.

General information about the programming styles

- **4-digit addresses.** The programming of the system parameters is organized with 4-digit address codes. The menus have the following structure:
  - 0xxx – General Settings Menu.
  - 1xxx – General User Menu; 1zzy – User Settings, where "zz" is a user number from 01 to 64, and "y" is an option.
  - 2xxx – General Zone Settings Menu; 2zzy – Zone settings, as "zz" is a zone number from 01 to 32, and "y" is an option.
  - 3xxx – General Setting for PGM 4; 3zzy – Settings for PGMs, as "zz" is a PGM number from 01 to 32, and "y" is an option.
  - 4xxx – General Areas Menu; 4zzy – Area Settings, as "zz" is an Area from 01 to 08, and "y" is an option.
  - 5zzy – Timeslots Settings, as "zz" is a time slot number from 01 to 08, and "y" is an option.
    In addition, at addresses 5411 to 5524 are set holidays and nonworking days by months.
  - 6xxx – General Settings for the digital communicator; 6zzy – Phone Settings, as "zz" is a phone number from 01 to 04, and "y" is an option.
  - 8zzy – Device Menu, as "zz" is a device number from 01 to 30, and "y" is an option.
    Note: *The Device 01 is always the main PCB of the control panel.*

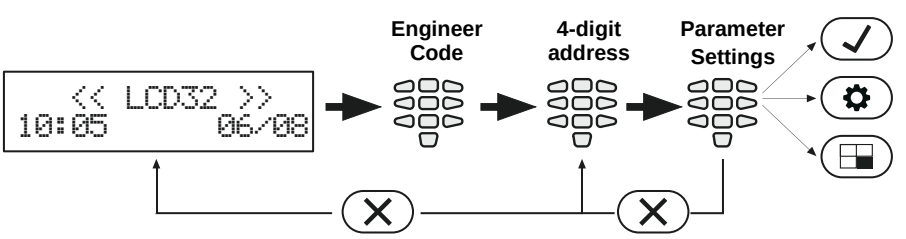

Cancel the entered settings and return to the main menu

- **3-digit operations.** The programming of the system parameters is organized with 3-digit operation codes. The menus have the following structure:
  - 0xx – General Settings Menu.
  - 1xx – General User Menu; 1zz - Options for Users, as “zz” is an option number; after the option number is necessary to enter a user number from 01 to 64.
  - 2xx – General Zone Menu; 2zz – Zone options settings, as “zz” is an option number; after the option number is necessary to enter a zone number from 01 to 32.
  - 3xx – General Setting for PGM 4; 3zz – PGM options settings, as “zz” is an option number; after the option number is necessary to enter a PGM number from 01 to 32.
  - 4xx – General Areas Menu; 4zz – Area options settings, as “zz” is an option number; after the option number is necessary to enter an Area number from 01 to 08.
  - 5zz – Timeslot Menu, as “zz” in an option number; after the option number is necessary to enter an Timeslot number from 01 to 08. In addition, at addresses 541 to 544 are set holidays and nonworking days – and the number of the month from 01 to 12.
  - 6xx – General Settings for the digital communicator; 6zz – Phones options settings; after the option number is necessary to enter a phone number from 01 to 04.
  - 810 + zz – Device Menu, as “zz” is a device number from 01 to 30.

  Note: *The Device 01 is always the main PCB of the control panel.*

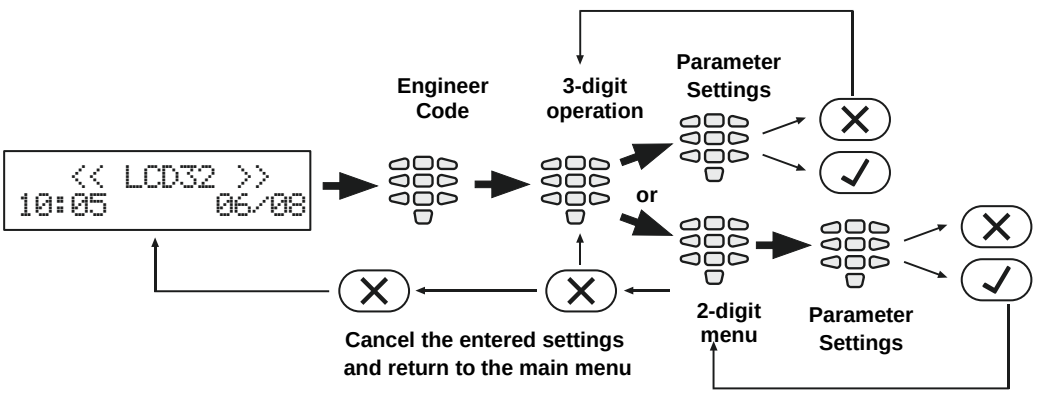

- **Text menus (tree-structure).** The system parameters are organized in text menus with tree-structure:

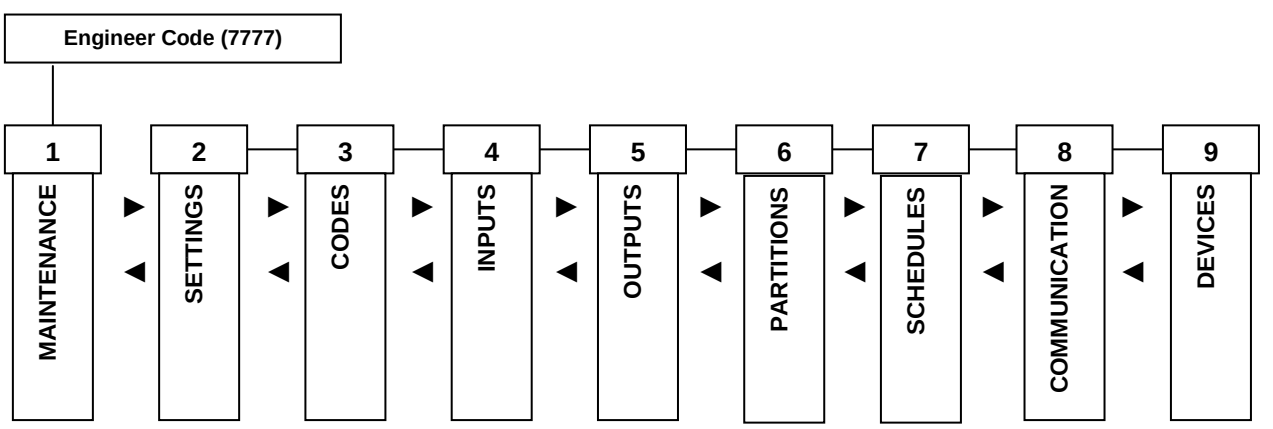

To enter in a text menu select it with the arrow buttons and confirm with ENTER. The programming of the parameters in the menus may differ according to their usage. Use the arrow buttons to scroll of the available menus or submenus. You can also directly enter in a menu with pressing its number – see the structure above.

The exit to the upper menu or submenu is with pressing the ✕ button.

There are several ways for setting parameters – that depends on the menu:

- **When the submenu allows choosing only one option** or attribute, or parameter from a list, the installer scrolls down to the desired one and confirms his choice with ✓ button. The set option is displayed with a “check” mark in front of it. The exit of the submenu is automatic. See Example 1 below.

- **When the submenu allows choosing of several options** or attributes, or parameters at the same time then the installer has to scroll down to each one and to enable it with pressing the 1 button. The set option is displayed with a “check” mark in front of it. The installer has to move to the next option using the arrow buttons and so on. To disable an option scroll down to it and press 0 button – the “check” mark will be deleted. When all the desired options are selected, the choice is confirmed with ✓ button. See Example 2 below.

Example 1

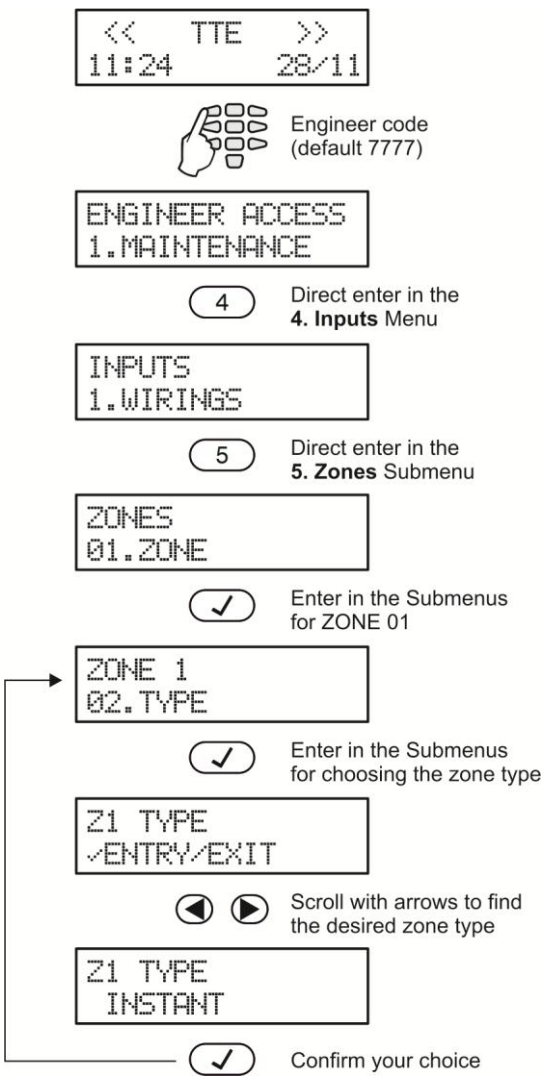

Example 2

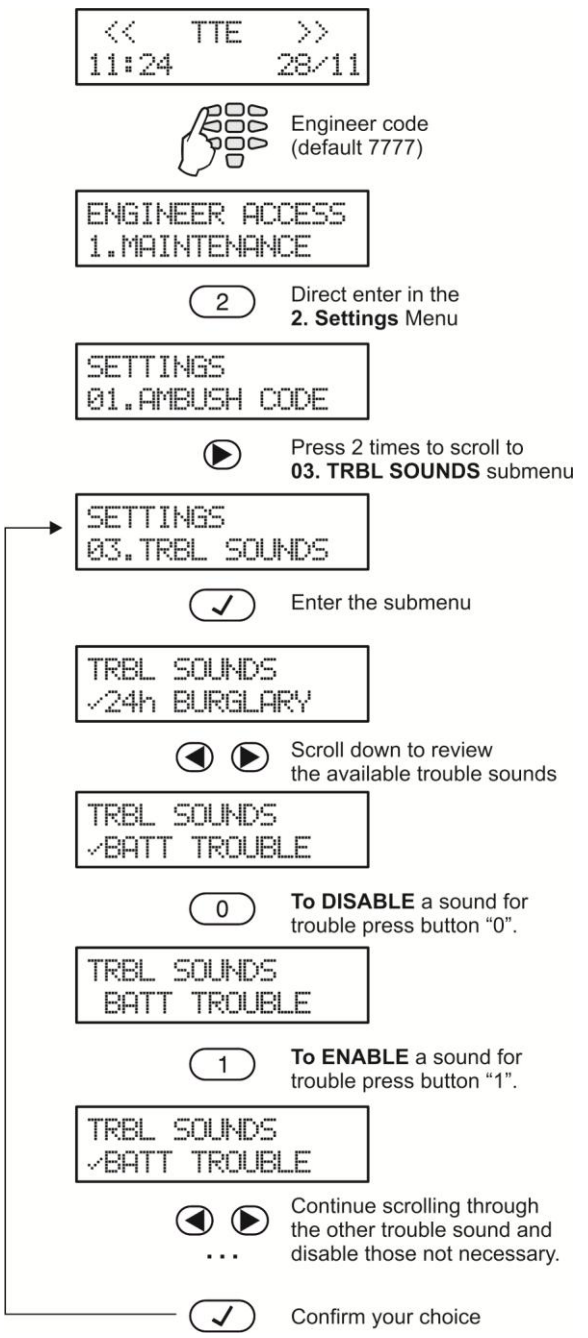

2. SUPPORTED KEYBOARDS FOR PROGRAMMING AND OPERATION

Eclipse 8/32 alarm control panel supports operation with the full range of Eclipse Series keyboards.

2.1. LED/LCD Keyboards

LED8 (open protective cover)
Supported programming style types:

- 4-digit address menus
- 3-digit operation menus

The keyboard provides specialized LED indication about the programming style and visualization of the selected parameter, option or attribute with the digit buttons.
The installer can review the number of the entered address or operation code using a special information button.

The general operation with LED8 keyboard is described in item 2.5.

LED32 (open protective cover)

Supported programming style types:

- 4-digit address menus
- 3-digit operation menus

LED16 (open protective cover)

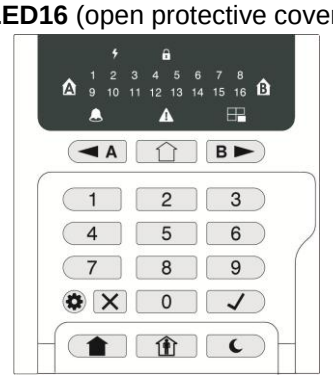

Supported programming style types:

- 4-digit address menus
- 3-digit operation menus

The general operation with the keyboards is described in item 2.6.

LCD32 (open protective cover)

Supported programming style types:

- 4-digit address menus
- 3-digit operation menus
- Text menus (tree-structure)

LCD32 Sensitive

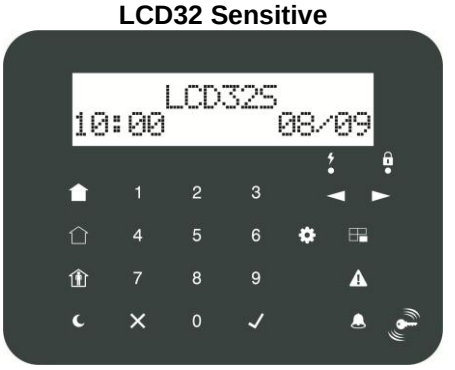

Supported programming style types:

- 4-digit address menus
- 3-digit operation menus
- Text menus (tree-structure)

The general operation with the keyboards is described in item 2.7.

Summary for ECLIPSE Series Keyboards:

Keyboard	Display	Areas	Zones	Proxi	Address	Operation	Text menu	AUX PGM
LED 8	LED	1	8	×	✓	✓	×	×
LED 16	LED	2	16	×	✓	✓	×	×
LED 32	LED	8	32	✓ (option)	✓	✓	×	×
LCD 32	LCD	8	32	✓ (option)	✓	✓	✓	✓
LCD 32S	LCD	8	32	✓	✓	✓	✓	✓

2.2 Sound Signalization from the Keyboards

All Eclipse Series Keyboards have sound signalization for occurring of different system events. The sound signalization has 4 volume levels adjustable at address 90 from the Manager programming menus.

Sound Signal	Description
Button	Single short beep indicating the pressing of a key.
Confirmation	Two long sound signals, indicating the system confirmation to executed operation. One long signal after confirmation for changing the programming style type.
Cancel operation	A single long beep, indicating system incorrectly executed operation.
Entry time	Continuous beep, indicating intrusion into an entrance zone.
Exit time	Short beeps, indicating the system is armed and the user is required to leave the entrance zone. Ten seconds before the exit time is over beep frequency increases.
Technical problem	Two short beeps at every 20 sec, indicating a technical trouble. To stop the signalization - press the TROUBLE button.
Chime	Short beeps with subsequently increasing period, indicating intrusion into a zone with an activated chime option.
Fire alarm	Three sound signals in sequence repeated every 5 seconds. That kind of signalization shows activated fire detector in the premises.

2.3. Supported Trouble Events in ECLIPSE Series

The possible system troubles are listed in the table below, together with the respective indication for LED and LCD keyboards. The sound signalization for a system trouble can be disabled at ADDRESS 0013. By default, the sound signalization for all system troubles is enabled.

Note: *The system troubles 7 and 8 are not supported for Eclipse 8 control panel.*

LED	LCD	Description
❶	1. AC Loss	The mains power supply is lost.
❷	2. Battery Trouble	The accumulator battery is discharged or missing.
❸	3. Blown fuse	Blown out fuse.
❹	4. Tel. line TRBL/ Comm. Fail	Telephone line of the digital communicator is lost & communication with central Monitoring station fails.
❺	5. Tamper	Open tamper in system.
❻	6. Sysbus err	System bus error. It could be short circuit in the line or lost device.
❼	7. Fire line Error	Fire Detector Loss or the fire line is broken.
❽	8. Siren Fault	Problem with connected siren; no siren connected to PGM5.

2.4. Buttons Functions

Note: *The functionality of BYPASS, TROUBLE and MEMORY buttons for LED8 and LED16 keyboards is accessible through the manager and user menus only with the respective LED indication on the display.*
The specialized LED indication of the LED8 keyboard is described in details in item 2.5.

Button	Function	Description
✓	ENTER	Confirmation of the entered data; step ahead in the engineer programming menus*. For LED8 and LED16 keyboards: Use the button to review the memory log file, the system troubles and the bypassed zones – the respective system LED is blinking during the review.
✕	CANCEL	Canceling the entered parameters; exit from a programming mode.
	FULL ARM	Quick button for Full Arming Mode.
	DISARM	Disarming the system. The button has a special function in text entering mode – deletes the current symbol and moves the cursor on one position to the left (like Backspace button on a standard PC keyboard).
	STAY ARM	Quick button for Stay Arming Mode. The button has a special function in text entering mode – shifting between small and capital letters.
	SLEEP ARM	Quick button for Sleep Arming Mode.
	PRG	Entry in Manager and User programming modes. The button has a special function in engineer programming mode – saving the entered settings and moves forward as the current index number is increased with +1*. Entry in Service Keyboard Mode.
	BYPASS	Bypassing zones. The button lights on permanently if there are bypassed zones in the system. The button is blinking during the bypassed zones review. The button has a special function in engineer programming – canceling the entered settings and moves forward as the current index number is increased with +1*, option 0.
	TROUBLE	Reviewing the system troubles. The button lights on permanently if there are system problems. The button is blinking during the system troubles review.
	MEMORY	Reviewing the memory events log file. The button lights on permanently if there are memory events. The button is blinking during the memory events review. The button has a special function in text entering mode – entering of special symbols (see the item 2.8 Entering text for LCD Keyboard).
◀ ▶	Scroll arrows	Arrows for moving the cursor on the left and on the right in programming mode.
0 - 9	Digit Buttons	Digital buttons for entering parameters, codes, etc.

** The functionality is available in 4-digit address programming style.*
The structure of the addresses is as follows:

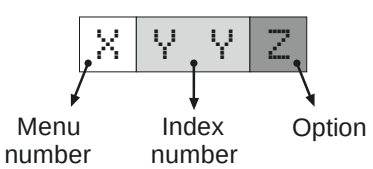

Example for ECLIPSE 32:
When pressing PRG button, the next viewed address is formed as the current index number is increased +1 and option number is the same. Example, from ADDRESS 2021 after pressing PRG the menu moves to ADDRESS 2031.

When pressing BYPASS button, the next viewed address is formed as the current index number is increased +1 and option is first possible. Example, from ADDRESS 2024 after pressing BYPASS the menu moves to ADDRESS 2030.

2.5. General Information for Operation with LED8

LED8 is a compact size keyboard with LED display, suitable for management and programming of ECLIPSE Series control panels. The keyboard has indication for 8 zones and can control one single area.
LED8 is equipped with specialized LED indication for informing the installer of the set programming style menu and specific visualization of the programming values and parameters.
The entering of codes, 3- and 4-digit addresses and values is with the digit buttons. For arming the system are used the quick buttons for the respective arming mode. When the system is armed, the button for the arming mode is lighting on in red – see the description of the quick buttons for arming in the table in item 2.4.

Specialized LED indication for LED8 keyboard:

LED	Indication	Description
⚙	Lights on	The system is in engineer or manager programming mode.
	Blinking	Shows a selected device in an engineer programming mode.
O	Lights on	The 3-digit programming style type is selected. View mode (of OPERATION number) after pressing the DISARM button. [O] is short from OPERATION.
A	Lights on	The 4-digit programming style type is selected. View mode (of ADDRESS number) after pressing the DISARM button. [A] is short from ADDRESS.
V	Lights on	The system waits for entering of setting of a parameter, or option. [V] is short from VALUE.
🔔	Lights off	No active alarms in the system.
	Lights on	Alarm in the system. The active alarms are reviewed by pressing the ENTER button.
	Blinking	View mode for active alarms.
⚠	Lights off	No system troubles in the system.
	Lights on	System trouble. The active troubles are reviewed by pressing the ENTER button.
	Blinking	View mode for system troubles.
⊞	Lights off	No bypassed zones in the system.
	Lights on	Bypassed zones in the system. The zone numbers are reviewed by pressing the ENTER button.
	Blinking	View mode – The numbers of bypassed zones are lighting on.

In normal operation mode the DISARM button lights on in green and it is off when the system is armed. The DISARM button has a specific functionality in engineer programming menus.

Button	Functionality	Description
	DISARM	System disarming.
	INFORMATION	Information about the ADDRESS number in engineer programming mode. The functionality is useful when the installer is confused during the engineer programming and wants to check up the current ADDRESS number before continue with the respective parameter or option settings. The button is used in the following way: 1. The symbols ⚙ and V are lighting on permanently together with a number of zone(s), according the type of the programmed parameter. A blinking digit shows that parameter which is in setting mode, and lighting on digit button shows the current set value for this parameter. 2. To find out what is the number of the current ADDRESS, press the button. If

		the set programming style is with 4-digit ADDRESSES – the A symbol lights on, and if it is with 3-digit operations - the O symbol lights on. The zone numbers from 1 to 4 or from 1 to 3 are lighting on, the zone 1 is blinking, and lighting on button shows the first digit of the address (operation) number. ***Recommendation:*** *If you are not familiar in details with the engineer programming menus (address and operation numbers) write down in sequence the digits (of lighting on buttons) corresponding to the respective address positions (zone numbers).* 3. Press the right arrow button. The cursor will move one position on the right, zone 2 starts blinking and lighting on digit number shows the next number of the address (or operation). 4. Proceed in an analogical way reviewing the address number up to the last digit. 5. Press the button again to step back in parameter setting mode. *Note: You can also leave the view mode and with single pressing the CANCEL button.*

- Engineer Programming

The engineer programming menus are accessible only when the system is disarmed. Lighting on symbols A or O indicate the currently set programming style type.
To access the engineer programming menus enter valid engineer code (7777 by default). A confirmation sound signal is heard and the system starts waiting for the installer to enter ADDRESS or OPERATION number for programming. According the set programming style, the LED displays:

- The zone numbers **1, 2, 3 and 4**, and A lighting on - **4-digit ADDRESS programming style**
- The zone numbers **1, 2 and 3**, and O lighting on - **3-digit OPERATION programming style**

The ⚙ symbol lights on permanently together with the letter for the set programming style – 4-digit ADDRESS programming style is set by default.

To proceed with programming, enter ADDRESS number and according the descriptions provided in item 7, set parameters, attributes and options for the system configuration. Use the digit buttons to enter the address number. Every pressing of a button turns one zone number off, and the pressed button lights on. After pressing the last digit of the address number, the system enters automatically in mode for setting parameters - V lights on, and A or O light off.

Several zone numbers will light on as their number depends on the current parameters for programming. Zone 1 is blinking to show that the first digit of the value is currently set. A permanently lit digit button shows the current set value. To change it, press other digit button according the parameter. If there are several values (when setting the date for example), you can review them using the arrow buttons. *Note: In case of setting options from ENABLE/ DISABLE type keep in mind that the opting is disabled when all digit buttons are off, and the option is enabled when all digit button are lighting on. You can change the setting of the option with pressing random digit button or arrows buttons.*

To confirm the entered settings press the ENTER button – the system automatically moves to the next address number. To cancel the entered parameters press the CANCEL button – the system will move back to the main screen for ADDRESS entry. To exit to main screen press CANCEL button a couple of times. In normal operation mode only the DISARM button lights on in green.

According the entered ADDRESS number the LED indication will differ. Use the detailed descriptions in item 7 to become familiar with the system settings.

Attention: The exit from the engineer programming menus is not automatic! Press CANCEL button several times to exit to the main display and normal operation mode – only the DISARM button lights on in green.

Example for reviewing of ADDRESS number in engineer menu with LED8 keyboard:

- The symbols ⚙ and V are lighting on. Zone 1 is blinking and Button 1 lights on.
- Press the button.
- The symbols ⚙ and A light up. Letter A means that the set programming style is with 4-digit ADDRESSES.
- Zone 1 is blinking. Button 0 is lighting on – this is the first digit of the ADDRESS number.
- Press the right arrow button.
- Zone 2 is blinking. Button 0 is lighting on – this is the second digit of the ADDRESS number.
- Press the right arrow button again.
- Zone 3 is blinking. Button 9 is lighting on – this is the third digit of the ADDRESS number.
- Press the right arrow button for the last time.

- Zone 4 is blinking. Button 7 is lighting on – this is the last digit of the ADDRESS number.
- The reviewed ADDRESS number is 0097 – Changing the programming style type.
- To go back to the parameter settings mode press the button again.

- Manager Programming

To access the manager programming menus enter valid manager code (0000 by default). A confirmation sound signal will be heard. Press the PRG ( ) button to enter in manager programming menus. Zone numbers 1 and 2, and LEDs and ○ are lighting on. The manager programming menus are 2-digit and are described in details in ECLIPSE Series Operation Manual – Manager and User Programming. If 30 sec after entering the manager programming there is no activity (pressed button), the system will exit in normal operation mode. It is possible to enter in manager programming menus from several keyboards at a time using the same manager access code.

Example for date setting in Manager programming menus using LED8 keyboard:

- Enter valid Manager code (0000 by default) and press button.
- LEDs and ○ are lighting on. Zone number 1 is blinking, and 2 is lighting on – the system waits for entering of 2-digit ADDRESS number.
- Enter 15 – ADDRESS for date setting.
- LEDs and ∨ are lighting on. Zone number 1 is blinking, zones from 2 to 6 are lighting on. The “0” digit button is lighting on (the set date by default is 01/01/12).
- Enter the new date using the format DDMMYY. You can use the buttons with arrows to review the entered new date before saving it – the lighting on digit button shows the set value for every currently blinking zone number on the display.
- Confirm the new set date with ENTER.

2.6. General Information for Operation with LED16 and LED32

LED 16 and LED 32 are keyboards with LED display, suitable for management and programming of ECLIPSE Series control panels. LED 16 has indication for 16 zones and can control 2 independent areas. LED 32 has indication for 32 zones and can control 8 independent areas.
The keyboards LED 16 and LED 32 operate with limited functionality when connected to ECLIPSE 8 control panel – operation with one area (A in LED16) and 8 zones.

- Engineer Programming

The engineer programming menus are accessible only when the system is disarmed.

According to the set programming style after entering an engineer code (7777 by default) the LED displays:

- The zone numbers **13, 14, 15 and 16** lighting on - **4-digit ADDRESS programming style**
- The zone numbers **14, 15 and 16** lighting on -**3-digit OPERATION programming style операции**

The both LEDs „lightning” (white) and „padlock” (red) are blinking together showing that the system is in engineer programming mode. Now, the system waits for entering of ADDRESS or OPERATION for programming – by default the 4-digit ADDRESS programming style is set.

Use the digit buttons to enter an ADDRESS number – the detailed description of the ADDRESSES and their functionality is provided in item 7. Every pressing of a button enters one digit and the lighting on zone numbers are reduced with one, the number of the pressed digit button lights up (for 0 lights on digit 10). According the entered address number the indication for the parameters is different. Use the address descriptions provided in item 7 to orientate for the required settings. To confirm the entered settings press the ENTER button, to reject them – the CANCEL button. To return to the display for address entering press single the CANCEL button. To exit the engineer programming menu press the CANCEL button once again. The keyboard is in normal operation mode when LEDs “Lightning” (white) and “padlock” (green) are lighting on together with the numbers of the used areas.

Attention: The exit of engineer programming menu is not automatic! To exit the engineer menu press CANCEL button several times until return to the normal operation mode.

- Manager Programming

To access the manager programming menus enter valid manager code (0000 by default). A confirmation sound signal will be heard. Press the PRG (⚙) button to enter in manager programming menus. Zone numbers 15 and 16 are lighting on, and both LEDs “Lightning” and “padlock” are blinking only on the keyboard for programming. The manager programming menus are 2-digit and are described in details in ECLIPSE Series Operation Manual – Manager and User Programming. If 30 sec after entering the manager programming there is no activity (pressed button), the system will exit in normal operation mode. It is possible to enter in manager programming menus from several keyboards at a time using the same manager access code.

2.7. General Information for Operation with LCD Keyboard

The LCD32 and LCD32 Sensitive are keyboards for management and control with text LCD displays.
The keyboards LCD32 and LCD32 Sensitive operate with limited functionality when connected to ECLIPSE 8 control panel – operation with one area and 8 zones.

To enter codes, addresses and parameters use the digit buttons. For arming the system can be used neither the quick buttons with the respective pictograms, or to choose the arming type from the screen scrolling with the arrows and confirmation with ENTER button. Use the provided in item 7 detailed descriptions of the all addresses in the system. To exit the engineer or manager programming menu press CANCEL button several times until return to main screen in normal operation mode.

2.8. Entering text for LCD Keyboard

The keyboard models *LCD32* and *LCD32 Sensitive* support text entering including small and capital letters (Cyrillic and Latin), digits, punctuation marks and other specific symbols

The regular letters and digits can be entered directly by the buttons or as a code combination after pressing the MEMORY button – look at the tables below.

It is possible to enter text up to 16 symbols including space.

Table for correspondence of the buttons:

Button	Letters, digits				
0	_	0			
1	1				
2	a	b	c	2	
3	d	e	f	3	
4	g	h	i	4	
5	j	k	l	5	
6	m	n	o	6	
7	p	q	r	s	7
8	t	u	v	8	
9	w	x	y	z	9

Use the STAY ARM button to enter capital letters.

Use the DISARM button to delete a symbol – the cursor moves with one step to the left.

Use the MEMORY button to enter some special symbols and Cyrillic letters.

To enter a specialized symbol, move the cursor to the desired position, press the

MEMORY button (a solid cursor appears) and then using the digit buttons enter the respective code for the symbol or letter as check in the table below.

Table of the symbols and codes correspondence:

032	040	048	056	064	072	080	088	096	104	112	120
033	041	049	057	065	073	081	089	097	105	113	121
034	042	050	058	066	074	082	090	098	106	114	122
035	043	051	059	067	075	083	091	099	107	115	123
036	044	052	060	068	076	084	092	100	108	116	124
037	045	053	061	069	077	085	093	101	109	117	125
038	046	054	062	070	078	086	094	102	110	118	126
039	047	055	063	071	079	087	095	103	111	119	127

160	168	176	184	192	200	208	216	224	232	240	248
161	169	177	185	193	201	209	217	225	233	241	249
162	170	178	186	194	202	210	218	226	234	242	250
163	171	179	187	195	203	211	219	227	235	243	251
164	172	180	188	196	204	212	220	228	236	244	252
165	173	181	189	197	205	213	221	229	237	245	253
166	174	182	190	198	206	214	222	230	238	246	254
167	175	183	191	199	207	215	223	231	239	247	255

Example: To enter the „asterisk" symbol, first press the MEMORY button (a solid cursor appears on the place) and after that enter code 042. The asterisk symbol will appear and the cursor will move one position to the right.

3. PROGRAMMING WITH SPECIALIZED ProsTE SOFTWARE

ProsTE is specialized software for direct programming of burglary and fire alarm panels manufactured by Teletek Electronics JSC.

The programming of ECLIPSE Series control panels is via serial connection using specialized "cable ProsTE". It is strongly recommended as a first step to read the set to control panel parameters, as second – changing parameters and at the end – writing the new settings to the control panel.

A detailed description for the operation with ProsTE software is provided in the built-in help files.

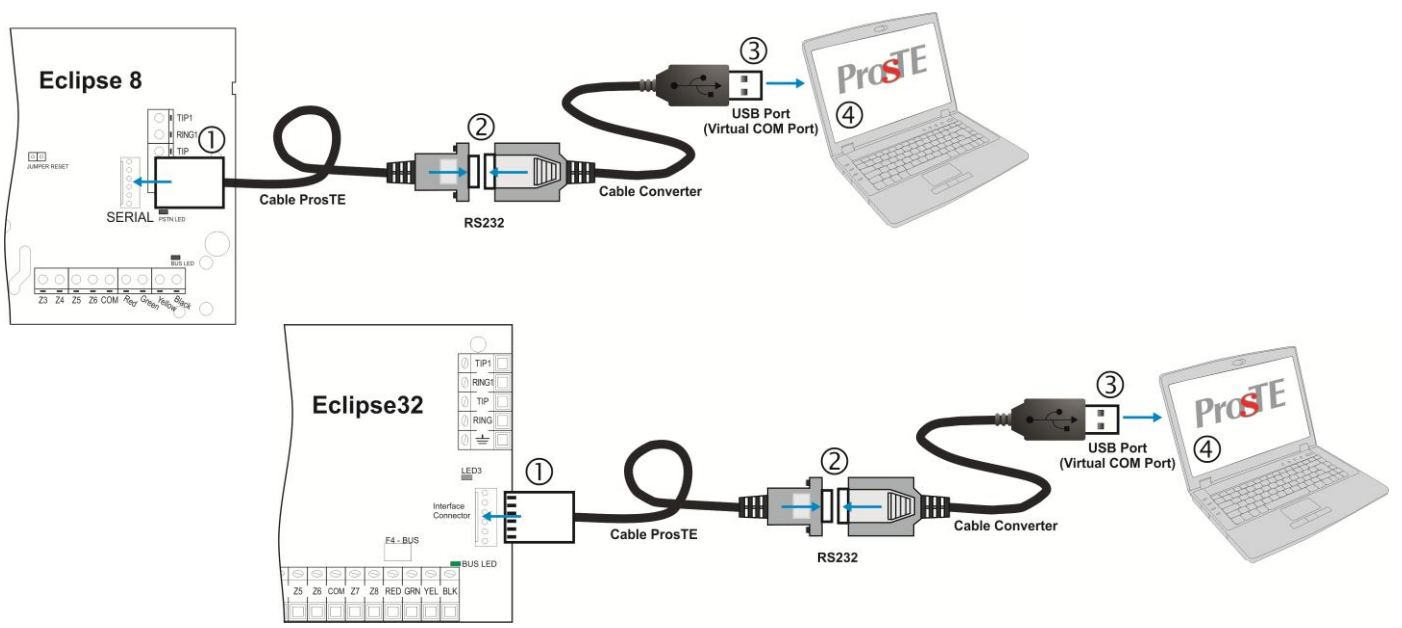

Serial connection between the ECLIPSE 8 / ECLIPSE 32 and PC with ProsTE software

4. OPERATION WITH A SERVICE KEYBOARD

The service keyboard is a device, which is not a part of the system configuration, but can provide full access to all engineer programming menus. Every keyboard of Eclipse Series can be used as service, **when it is not enrolled at address** in the system configuration.

The service keyboard is not enrolled at a certain address and that is why its removing will not cause a system trouble for a lost device.

To enter the “Service keyboard” mode press the PRG (⚙) button after powering up the keyboard.
You can connect only one service keyboards to the system configuration at the same time.

The “Service keyboard” mode allows access only to the engineer programming menus and the Manager and User programming menus are not available. The system arming and disarming is also unavailable.

Every Eclipse Series keyboard can be service keyboard if it is not currently connected and enrolled to the system configuration.

To enter the “Service keyboard” mode **with a new keyboard**:

- Connect the keyboard to the system bus and wait the initial initialization to complete.
- Single press the PRG button (⚙).
- A confirmation sound signal is heard indicating that the keyboard is ready for operation.
- When you finish with the engineer programming, exit to the main screen.
- Power off the keyboard and disconnect it from the system bus.

To enter the “Service keyboard” mode **with a present keyboard in the system configuration**:

- Use one of the other keyboards in the system configuration to delete the unique ID number of the one selected for service keyboard – enter the keyboard ID address 8xx0, where “xx” is the device number from 02 to 32 (01 is always the PCB of the control panel), and delete the ID number with pressing the “0” button for 2-3 seconds. It is not necessary to confirm with ENTER.
- Power off the keyboard for a moment – disconnect it from the system bus.
- Connect the keyboard to the system bus again and wait the initialization to complete.
- Press the PRG (⚙) button.
- A confirmation sound signal is heard indicating that the keyboard is ready for operation.
- When you finish with the engineer programming, exit to the main screen.
- Power off the keyboard and disconnect it from the system bus.

ATTENTION: If the engineer access is disabled from the manager programming menu the access will be denied and for the service keyboard!

5. ENROLLING / DELETING OF DEVICES

5.1. Enrolling Devices during the Initial Start-up of the Control Panel

1. With set RESET jumper on the main PCB power up the Eclipse control panel.
2. Wait the initial initialization of the connected to the system bus keyboards. At the end of the procedure, the bus LED of all devices including the main PCB is lighting permanently in red. A text message “SW revision XX; Press ENTER” is displayed on LCD screen, and at LED keyboards is lighting on only the power LED. For LED 8 only buttons are lighting on.
3. Start to press the ENTER button or tamper-switch of the devices – the manufacturer recommends first to enroll the keyboards in the system, then proxy readers, modules, etc. The system starts an automatic enrollment procedure of the devices on consecutive addresses starting with address 8020. Remember that the first enrolled device to the system bus is always the main PCB of the panel. It is strongly recommended the next enrolled device to be a LCD keyboard for programming.
4. Remove the RESET jumper and wait the system bus LED to stop blinking in green. The system is ready for further programming and parameter configuration.

5.2. Enrolling Devices to a working system configuration via LCD keyboard

1. Enter engineer code (7777 by default).
2. Enter ADDRESS 8020 and press BYPASS button several times until you reach a free address in the system. The screen displays:

[Free] [_ _ _ _ _ _ _ _]

3. Press the ENTER button (for a keyboard) or the tamper-switch (for module, proxy reader or other) of the device connected to the system bus and which you want to enroll to the system configuration.
4. After successful enrollment to the control panel, the screen displays:

[Device type] [unique ADDRESS] for the respective device.

The following device types are supported from ECLIPSE Series:

Device	Description	ECLIPSE 8*	ECLIPSE 32**
MAIN	The main PCB of the control panel	✓	✓
LED	Keyboard LED 16/ 32	✓	✓
LCD	Keyboard LCD 32/ 32S	✓	✓
ZEXP	Zone expander	×	✓
PEXP	PGM expander	×	✓
Proxi	Proximity card reader	✓	✓
WEXP	Wireless expander	×	✓
LED8	Keyboard LED 8	✓	✓

* ***Eclipse 8:*** *Up to 2 devices can be enrolled to the system bus: 2 keyboards, 2 proxi readers or 1 keyboard and 1 proxi reader.*
** ***Eclipse 32:*** *Up to 31 devices can be enrolled to the system bus irrespective of their type.*
NOTE: *It is not necessary to enroll the built-in proximity reader in keyboards LED 32, LCD 32 and LCD 32S.*

5. Press ENTER button of the used for programming keyboard. The keyboard will confirm the end of the successful enrollment procedure with sound signal.
6. The new enrolled device is in normal operation mode and ready for further programming and configuration.

**** Note****: Other way for enrolling of a new device is to enter its unique ID number directly at a free address as use the digit buttons and some button combinations – see the table below. The unique ID number is provided from the manufacturer with a sticker on the backside of the PCB of the device.*

Digit	Button
0	0
1	1
2	2
3	3
4	4
5	5
6	6
7	7
8	8
9	9

Letter	Button Combination
A	⌂ + 0
B	⌂ + 1
C	⌂ + 2
D	⌂ + 3
E	⌂ + 4
F	⌂ + 5

5.3. Enrolling Devices to a working system configuration via LED keyboard

1. Enter engineer code (7777 by default) – zone numbers 13, 14, 15 and 16 are lighting on. (For LED 8 – 1, 2, 3 and 4).
2. Enter ADDRESS 8020 and press BYPASS button several times until you reach a free address in the system –zone numbers from 1 to 16 are lighting on. (For LED 8 – button “0” is lighting on).
3. Press the ENTER button (for a keyboard) or the tamper-switch (for module, proxy reader or other) of the device you want to enroll to the system configuration.
4. After successful enrollment to the control panel, the screen displays a lighting on zone number according the type of the enrolled device (for LED 8 a lighting button):

Number	Description	ECLIPSE 8*	ECLIPSE 32**
1	The main PCB of the control panel	✓	✓
2	Keyboard LED 16/ 32	✓	✓
3	Keyboard LCD 32/ 32S	✓	✓
4	Zone expander	×	✓
5	PGM expander	×	✓
6	Proximity card reader	✓	✓
7	Wireless expander	×	✓
8	Keyboard LED 8	✓	✓

* ***Eclipse 8:*** *Up to 2 devices can be enrolled to the system bus: 2 keyboards, 2 proxi readers or 1 keyboard and 1 proxi reader.*
** ***Eclipse 32:*** *Up to 31 devices can be enrolled to the system bus irrespective of their type.*
NOTE: *It is not necessary to enroll the built-in proximity reader in keyboards LED 32, LCD 32 and LCD 32S.*

5. Press ENTER button of the used for programming keyboard. The keyboard will confirm the end of the successful enrollment procedure with sound signal.
6. The new enrolled device is in normal operation mode and ready for further programming and configuration.

5.4 Deleting of a device from the system configuration

1. Enter engineer code (7777 by default)
2. Enter the address of the device you want to delete from the system configuration.
3. At the respective address press and hold the button “0” for 2-3 seconds – the LCD shows [Free] for the address, LED 16/ 32 – LEDs from 1 to 16 are lighting on, LED 8 – button “0” lights on. A continuous sound signal is heard. **Attention: Deleting the unique ID number with button “0” is permanent and you cannot reject the operation with CANCEL button! To enroll the device again follow the procedure described at items 5.2 and 5.3.**

6. ENGINEER PROGRAMMING

The Engineer programming menus are available only when the system is fully disarmed. By default, the engineer access code is 7777.
The display performance is different according to the used keyboard model for programming:

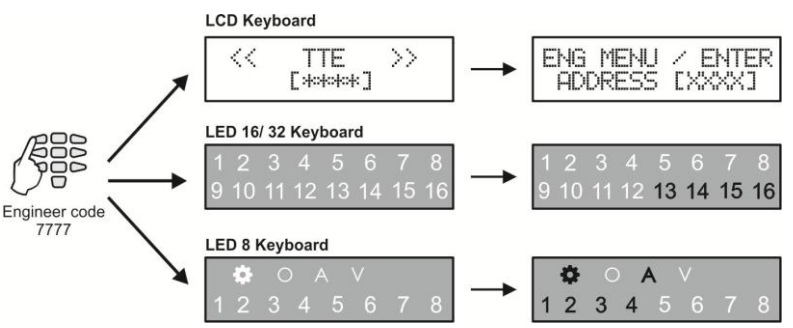

The access to the Engineer programming menus is from one keyboard only while all other connected to the system bus keyboards are temporally disabled for any operation. The LCD keyboards display a message „Engineer Mode!!!”

By default, the programming type is with 4-digit address code numbers. To change it, enter engineer code and in the ADDRESS [XXXX] field enter 0097. Choose the new menu style for programming: [2] for 3-digit operation programming or [3] for text programming menus, or leave [1] for 4-digit address programming.

Confirm your final choice with ENTER.

Before starting the programming of any system parameter read carefully the provided detailed information for each menu and make sure that you understand the descriptions.

6.1 Organization of the Engineer Programming Menus

For Installer's convenience, every programming parameter description includes the access via all the programming types:

ENG1 CODE	ADDRESS	0000
	OPERATION	000
	TEXT MENU	3. CODES – 2. ENGINEER – 1. ENG1 CODE

Programming Parameter Menu type Access

Important Notes!

6.2 Indication

The indication while programming different system parameter is performed in several common types according the structure of the address or operation.

- Indication for introducing time values

LCD	0014>KBD HIDE [010]	Enter the new time using the digit buttons. The time interval varies according the parameter. For values smaller than 10 enter "00" in front of it – for example 005.
LED 16/ LED 32	1 2 3 4 5 6 7 8 9 **10** 11 12 13 14 **15** **16**	The zones 14, 15 and 16 show the number of the digits of the parameter. The zones from 1 to 10 show the current set value for every digit, as 10 means 0. The currently set digit is blinking. Use the arrows to review the values set to all digits. For example, the zone 14 is blinking – the first digit of the parameter and its value is 0 (10 lighting on). Move to the right to review the set value for the second digit – zone 15 is blinking and 1 is lighting on. Enter the new time using the digit buttons. Every pressing of a button sets new value and automatically moves the cursor to the right.
LED 8	⚙ O A V 1 2 3 4 5 6 7 8	The zones 1, 2 and 3 show the number of the digits of the parameter. LED symbol "V" is lighting on to show that the system is in value programing mode. Lighting on digit button shows the current set value for every digit.

- Indication for introducing parameter "ENABLE/ DISABLE" type

LCD	0016>SOUND TMPR Enable	"DISABLE" or "ENABLE" is displayed on the screen. Press random digit button or arrows to switch over.
LED 16/ LED 32	**1 2 3 4 5 6 7 8** 9 10 11 12 13 14 15 16	The "ENABLE" parameter is set when the zone numbers from 1 to 8 are lighting on; The "DISABLE" parameter is set when all zone numbers are off. Press random digit button or arrows to switch over.

LED 8	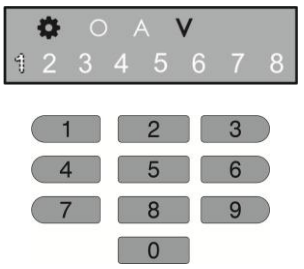	The zone 1 is blinking and LED symbol “V” is lighting on to show that the system is in value programing mode. The “ENABLE” parameter is set when digit buttons from 0 to 9 are lighting on; The “DISABLE” parameter is set when all digit buttons are off. Press random digit button or arrows to switch over.

- Indication for introducing option/ attribute number

LCD	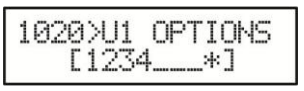	The digits of the enabled options/ attributes are displayed on the screen. The disabled options are performed with asterisk symbol “*”. To enable/ disable an option press the respective digit number.
LED 16/ LED 32	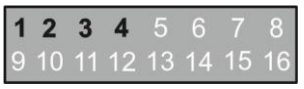	The digits of the enabled options/ attributes are lighting on the screen. The disabled options are off. To enable/ disable an option press the respective digit number.
LED 8	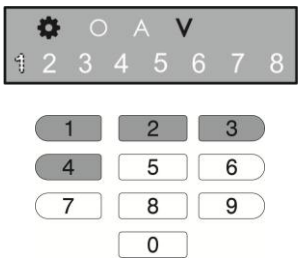	The zone 1 is blinking and LED symbol “V” is lighting on to show that the system is in value programing mode. The digit buttons corresponding to the enabled options/ attributes are lighting on. The digit buttons corresponding to the disabled options are off. To enable/ disable an option press the respective digit button.

6.3 Special Symbols

The engineer programming is common for every Eclipse Series control panels. Use the quick tables in the beginning of every menu to check the availability of address numbers for programming and settings.
The pictograms for Eclipse series are placed in front of important notes concerning the different models control panels.

The pictograms used in the descriptions below have the following meaning:

ECLIPSE 8 - The option, parameter or setting is available or specific only for ECLIPSE 8 control panel.

ECLIPSE 32 - The option, parameter or setting is available or specific only for ECLIPSE 32 control panel.

LCD - The option, parameter or setting is accessible only through LCD keyboard.

LED 8 - The setting is specific when using LED 8 keyboard.

⚠ - Important note concerning programming.

☞ - Useful tip.

📖 - Example.

⇢ - The address description continues on the next page.

7. ENGINEER MENUS – Programming Tables

0. General Settings

In “GENERAL SETTINGS” menu are programmed common parameters for the system.
Attention: Some of the addresses are available for programming only with a LCD keyboard!

Quick table for 0. General Settings Programming Menu

Address Number				Programming parameter	ECLIPSE 8	ECLIPSE 32
0	0	0	0	Changing the Engineer code	✓	✓
0	0	0	1	Changing the Maintenance code	×	✓
0	0	1	0	Ambush Code	✓	✓
0	0	1	1	KBD Block	×	✓
0	0	1	2	Chime	✓	×
0	0	1	3	TRBL Sounds	✓	✓
0	0	1	4	Confidential Timer	×	✓
0	0	1	5	AC Delay	✓	✓
0	0	1	6	Sound TMPR	✓	✓
0	0	1	7	Alarm Delay	×	✓
0	0	2	0	Walk Test	✓	✓
0	0	2	1	PGM Test	✓	✓
0	0	2	3	COMM Test	✓	✓
0	0	3	0	Hardware Reset	✓	✓
0	0	3	1	Select Menu	✓	✓
0	0	3	2	Reset MNG	✓	✓
0	0	4	0	LOG Review	✓	✓
0	0	5	0	System Name	✓	✓
0	0	5	1	Time	✓	✓
0	0	5	2	Date	✓	✓
0	0	9	7	Menu Style	✓	✓
0	0	9	8	SW Revision	✓	✓
0	0	9	9	Default	✓	✓

ENG1 CODE

ADDRESS	0000
OPERATION	000
TEXT MENU	3. CODES – 2. ENGINEER – 1. ENG1 CODE

Changing the Engineer code
The Engineer can enter new access code for engineer programming menus at this address.
This access code has full rights for programming of all engineer menus.
After entering the menu use the digit buttons to enter the new 4/6-digit code* and then confirm with ENTER button.

***** *ECLIPSE 8 allows operation only with 4-digit access codes.*

Engineer Code by Default: 7777

ENG2 CODE

ADDRESS	0001
OPERATION	001
TEXT MENU	3. CODES – 2. ENGINEER – 2. ENG2 CODE

ECLIPSE 32

Changing the Maintenance code
The Maintenance code can access all engineer programming menus **except the menus for communication devices - ADDRESSES 6xxx.**
After entering the menu use the digit buttons to enter the new 4/6-digit code (see the description of ADDRESS 1000) and then confirm with ENTER button.

Maintenance Code by Default: 9999

AMBUSH CODE

ADDRESS	0010
OPERATION	010
TEXT MENU	2. SETTINGS – 01. AMBUSH CODE

At this address, you set the parameter as:

DISABLE	Ambush code is not supported - the parameter is deactivated.
ENABLE	Ambush code is supported - the parameter is active.

This setting allows users to use an authority code during unauthorized forcing to disarm the system (ambush code).
The ambush code is a personal code that disarms the system but still sends an alarm signal to the central monitoring station to indicate that the user has been forcefully made to disarm the system. After entering the ambush code the system will be disarmed with no sound signalization from the sirens, but is generated “silent panic” alarm – the event is recorded in the memory LOG file and an alarm message is sent to the central monitoring station.

The ambush code is produced from a personal code by increasing the last digit by one. If the last digit is 9, it is replaced by 0.

The ambush code for 1234 is 1235, and for 9009 is 9000.

The parameter status is changed with pressing of random digit button of the keyboard. The change is confirmed with ENTER button.

Parameter by default: DISABLE

KBD BLOCK

ADDRESS	0011
OPERATION	011
TEXT MENU	2. SETTINGS – 02. KBD BLOCK

ECLIPSE 32

At this address, you set the parameter as:

DISABLE	The keyboard blocking mode is disabled.
ENABLE	The keyboard block mode is enabled – the keyboard buttons will be blocked for 90 seconds if three wrong codes are entered in sequence, a continuous sound signal is heard.

At this address, the engineer allows blocking the keyboard buttons for 90 seconds when three wrong user codes are entered in sequence.

The access to the system is blocked only for that keyboard through which the three wrong user codes are entered. A continuous sound signal is heard when the access through the keyboard is enabled again.

The keyboard blocking mode will be activated when the time between entered wrong codes is less than 15 seconds.
The access to a blocked keyboard can be restored also after entering of valid engineer code using any other keyboard connected to the system bus.

In keyboard blocking mode, the LCD keyboard displays a message “Keyboard is locked” and a backward timer shows the remaining time to normal mode.
In keyboard blocking mode, the LED keyboard displays the numbers from 1 to 16 (1 to 8 for LED8) lighting off one by one during the backward timer.

The parameter status is changed with pressing of random digit button of the keyboard. The change is confirmed with ENTER button.

Parameter by default: DISABLE

CHIME

ADDRESS	0012
OPERATION	012
TEXT MENU	2. SETTINGS – 02. CHIME

ECLIPSE 8

Chime Sound Signalization

At this address, you set the parameter as:

DISABLE	The “Chime” sound signalization is deactivated.
ENABLE	The “Chime” sound signalization is activated.

At this address, the engineer can enable or disable the “Chime” sound signalization activated for opening of entry-exit type zones.
The parameter status can be changed with pressing of random button of the keyboard. The change is confirmed with ENTER button.

Parameter by default: ENABLED

TRBL SOUNDS

ADDRESS	0013
OPERATION	013
TEXT MENU	2. SETTINGS – 03. TRBL SOUNDS

The trouble sound indication (two short beeps in every 20 seconds) from the keyboard in Technical Trouble mode is assigned at this address.

The sound signalization is available for the following troubles:

1. AC Loss	Main power supply loss.
2. Battery Trouble	Battery low charge or missing.
3. Blown fuse	Fuse burnt out.
4. Tel. line TRBL/ Comm. Fail	Telephone line trouble & no communication with central monitoring station.
5. Tamper	Open tamper in the system.
6. Sysbus error	Error on the system bus, i.e. possible short circuit or lost device.
7. Fire line error	Fire Detector Loss; Broken fire line.
8. Sounder fault	Possible problem or siren missing.

ECLIPSE 32

☞ *It is possible after the initial startup of the system a trouble message for 8. SOUNDER FAULT to be displayed on the screen of LCD keyboards (8 zone number lights on the LED display). That indicates some problems with sounder connected to PGM5. If case the PGM5 is used as a standard output, you have to terminate it with 1kOm resistor, or to program it as regular output – disable option 1 at ADDRESS 3051.*

The trouble sound signalization is enabling with pressing a button with the respective number from 1 to 8. Pressing the button with the same number again will disable the trouble indication for the respective technical problem.

☞ *To disable/ enable all trouble sounds press button “0” – the button alternatively switches over all enabled / all disabled state.*

The set parameters are confirmed with pressing the ENTER button.

Parameter by default: All ENABLED

CONF. TIMER

ADDRESS	0014
OPERATION	014
TEXT MENU	2. SETTINGS – 04. CONF. TIMER

ECLIPSE 32

"Confidential Mode" Timer

This parameter is common for all keyboards. Enter a time from 0 to 180 seconds.
The "Confidential mode" is a special mode for hiding the information for the activated zones and used areas. The mode is assigned for every keyboard at address 8xx2 (Device Options), with enabling the options 3 and 4 – see the detailed description in Menu 8. Peripheral Devices.

Parameter by default: 010 (10 seconds)

AC DELAY

ADDRESS	0015
OPERATION	015
TEXT MENU	2. SETTINGS – 05.AC DELAY

AC Power Supply Failure Indication Delay

Programming of time for delay indication in case of 220 VAC power supply failure.
Enter a time from 0 to 255 minutes. The set time is confirmed with ENTER button.

In case of using a LED keyboard, you can review the set time with arrow buttons. The blinking zone number indicates a programming mode for that value. A permanently lit zone number shows the current set value (10 means 0). To change it, press other digit button – the cursor automatically moves on the next value to the right.

If by mistake the installer enters bigger time than maximal of 255 minutes, the keyboard will reject the entered value and will display the maximal possible one.

Parameter by default: 030 (30 minutes)

SOUND TMPR

ADDRESS	0016
OPERATION	016
TEXT MENU	2. SETTINGS – 06.SOUND TMPR

Programming of Silent/ Audible Sound TAMPER signal
Programming of silent or audible TAMPER event (a zone TAMPER type or physical tamper-switch is open) when the system is disarmed.

At this address, you set the parameter as:

DISABLE ***Silent TAMPER***	In case of a TAMPER event: - The LED indication is activated; - TAMPER Outputs type are activated (the ALARM and SIREN outputs type are not activated); - An alarm message is send to monitoring station.
ENABLE ***Audible TAMPER***	In case of a TAMPER event: - The LED indication and the internal buzzer of the keyboards are activated and can be cleared only after entering of valid user code; - An alarm signal activated (activation of outputs type ALARM, SIREN and TAMPER); - An alarm message is send to monitoring station.

Programming this address will not affect the TAMPER signal when the system is in armed mode.
Programming this address will affect the performance of the programmable outputs type SIREN, ALARM and TAMPER, the LED and sound indication of the keyboards and the digital communicator when the system is disarmed.
Every pressing of a digital button alternatively changes the enabled / disabled status. The display indication is shown in the table.

Parameter by default: ENABLE (audible TAMPER)

ALARM DELAY

ADDRESS	0017
OPERATION	017
TEXT MENU	2. SETTINGS – 07.ALARM DELAY

ECLIPSE 32

Programming of alarm message delay to monitoring station and siren activation with 30 seconds or until the programmed entry time is over (the smaller value of both times is taken) in case a zone, out of the entry route, is activated.

At this address, you set the parameter as:

DISABLE	The delay is disabled – the system immediately sends an alarm message to the monitoring station and activates the siren outputs.
ENABLE	30 seconds delay is enabled – the system will delay sending of alarm message and siren outputs activation with 30 seconds when in arming mode Entry-Exit, Follow or Instant type zones are activated. The system will wait 30 seconds for entering of valid user code to disarm or until the programmed entry time is over (the smaller value of both times is taken). If a valid user code is not entered in that period, the system will send an alarm message to the monitoring station and will activate the siren outputs.

Parameter by default: DISABLE

WALK TEST

ADDRESS	0020
OPERATION	020
TEXT MENU	1. MAINTENANCE – 2. WALK TEST

Enables functional test of zones. The respective light-emitting diode (LED keyboard) or a number of a zone (LCD keyboard), blinks while the zone is activated (open) in this mode. During the test, every zone activation is accompanied with "Chime" sound signal and with continuous sound for "reject" – open TAMPER zone.

PGM TEST

ADDRESS	0021
OPERATION	021
TEXT MENU	1. MAINTENANCE – 3. PGM TEST

Serviceability tests of programmable outputs are carried out at the address.

There are two fields available in the LCD keyboard display. The installer enters two digits in the first field – this is the PGM number for test, and in the second field alternatively changes the PGM status ON (PGM activation)/ OFF (PGM deactivation).

During the test is set low or high output level:

OFF	(NO) The output is switch on high level: +12 V
ON	(NC) The output is switch on low level: 0 V

LED 8

In operation with LED 8, after entering at the address the system automatically displays the value setting mode. The two active parameters for settings and test displayed with zone numbers 1, 2 and 3:

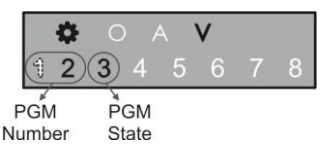

The blinking digit performs the value for editing, and a lighting on button displays the current set value. To change the value press a digit button – the cursor moves on the next zone number and so on. The zone number 3 performs the PGM status – ON (all buttons light on) and OFF (all buttons light off). The state is alternatively changed with pressing a random digit button or arrows.

COMM TEST

ADDRESS	0023
OPERATION	023
TEXT MENU	1. MAINTENANCE – 4. COMM TEST

The performance of the communicator can be directly monitored at this address.

Before starting the monitoring of the communicator performance, you have to enter a telephone number at ADDRESS 6010.

The FULL Arm (⌂) button causes test transmission from the communicator to the central station and from the voice dialer to assigned telephone numbers. The 0 button aborts any running communication and deletes the queue of events to be sent.
The meaning of the symbols is given below, as the "active state" means permanent lighting of the LEDs (LED keyboard) or step number (LCD keyboard).
After communication has been successfully completed, the keyboard emits a sound signal. The CLEAR button exits Address 0023.

Button	Action
1	Dialing the telephone number.
2	Waiting for „handshake” signal from the monitoring station.
3	Transmitting data to the monitoring station.
4	Waiting for confirmation signal from the monitoring station, ‘kissoff’ signal.
5	Communication process has been completed and all data has been successfully transmitted to the central station.

HWR RESET

ADDRESS	0030
OPERATION	030
TEXT MENU	2. SETTINGS – 08.HWR RESET

Hardware Reset Enable

Specialized service is required where the hardware RESET is disabled and the engineer code is obscure.

The parameter status can be changed with pressing of random button of the keyboard.

At this address, you set the parameter as:

DISABLE	The hardware reset is not allowed.
ENABLE	The hardware reset is allowed.

Parameter by default: ENABLE

SELECT MENU

ADDRESS	0031
OPERATION	031
TEXT MENU	2. SETTINGS – 09.PART DEFAULT

Partial software reset of a programming menu.
The engineer can make a partial reset and to restore the system parameters for a certain programming menu at this address. Enter a number from 0 to 8 (except 7) and press ENTER. The system will ask for a confirmation password – enter in sequence the service code 123456 and press ENTER. The system will restore the default settings only for the chosen menu.

To restore the default parameters for a menu press the respective digit button (in operation with 4- and 3-digit addresses):

Button 0 – Menu 0. General Settings
Button 1 – Menu 1. Users
Button 2 – Menu 2. Zones
Button 3 – Menu 3. PGM Outputs
Button 4 – Menu 4. Areas
ECLIPSE 32 Button 5 – Menu 5. Time Slots
Button 6 – Menu 6. Communicator
Button 8 – Menu 8. Peripheral Devices

RESET MNG

ADDRESS	0032
OPERATION	032
TEXT MENU	2. SETTINGS – 10. RESET MNG

Main Manager Code Reset

Restoration of the default main manager code (User 01). Buttons 1, 2, 3, 4, 5, 6 are pressed in succession and confirmed with the ENTER button.
The system restores the default 0000 manager user code.

Default Main Manager Code: 0000

LOG EVENT

ADDRESS	0040
OPERATION	040
TEXT MENU	1. MAINTENANCE – 1. VIEW LOG

Memory LOG Events

Review of memory LOG events in the system.
The memory LOG file is with different capacity: 256 (ECLIPSE 8) and 1024 (ECLIPSE 32) system events. The events recorded in the power independent memory of the control panel can be traced with the help of the arrows. The first event which is visualized is the last recorded.

Use the digit button 2 to review some additional information for the event such as user, zone or area number.

In case of using a LED keyboard to review the memory LOG file, keep in mind that the visualization of the memory events is presented with hexadecimal values. For correct reading the information use the table for the events in the APPENDIX B.

SYSTEM NAME

ADDRESS	0050
OPERATION	050
TEXT MENU	2. SETTINGS – 11. SYSTEM NAME

LCD

Programming of the System Name

The engineer can enter a new system name at this address. The name has to be up 16 symbols – letters (small and capital), digits and special symbols, including spaces.
The letters can be entered directly by the digit buttons. The cursor moves automatically to the right after choosing of letter or digit, or may be moved manually by the arrows. To enter a digit press the respective button and hold it for 2-3 seconds. See also item 2.8. Entering text for LCD Keyboard.
Confirm the new system name with ENTER button.

Default system name: << TTE >>

TIME

ADDRESS	0051
OPERATION	051
TEXT MENU	2. SETTINGS – 12. TIME

Setting the built-in clock
The engineer sets at this address the current time (HH:MM).

Default setting: [00:00]

DATE

ADDRESS	0052
OPERATION	052
TEXT MENU	2. SETTINGS – 13. DATE

Setting the system date
The engineer sets at this address the current date (DD/MM/YY).

Default setting: [01/01/12]

MENU STYLE

ADDRESS	0097
OPERATION	097
TEXT MENU	2. SETTINGS – 14. MENU STYLE

Programming Menu Style
The engineer sets the programming menu style at this address. Choose the number of the menu style according your preference, as:

1	**Programming with 4-digit address menus**. In LCD keyboards with the 4-digit address is available also and a short text description. This programming menu style is available in operation with all keyboard models.
2	**Programming with 3-digit operation menus**. In LCD keyboards with the 3-digit address is available also and a short text description. This programming menu style is available in operation with all keyboard models.
3	**Programming with text menus**. The text menus are available as tree-structure. This menu programming style is available only in operation with LCD клавиатури.

If you choose to operate with text menus, they will be available only with LCD keyboards in the system, while the engineer programming via the LED keyboards in the system will the available with 4-digit address menus.

Default setting: [1]

SW REVISION

ADDRESS	0098
OPERATION	098
TEXT MENU	1. MAINTENANCE – 5. SW REVISION

Software revision
The engineer can review the current software revision of the control panel at this address.

SYSTEM DEFAULT

ADDRESS	0099
OPERATION	099
TEXT MENU	2. SETTINGS – 15. SYS DEFAULT

Default configuration settings
Choosing of default system configuration. By default is set the system configuration 0. The installer can choose between 3 different system configuration settings. Ask your supplier for more details. Enter a number from 0 to 2.

Default setting: [0]

1. Users

In “USERS” menu, the engineer programs some parameters and settings for the managers and users in the system.
Some of the addresses are available for programming only with LCD keyboard!
Attention: The USER 01 is the Chief Manager of the system. The Chief Manager has full rights to operate with manager’s programming menus. The Chief Manager rights cannot be changes – the option “8. MANAGER” is always enabled and it changing is disabled. All other users in the system, Users 02 to 64 are with freely programmable rights, as every one of them can be Manager in the system or regular user.
All Managers have extended rights in the system and can assign user codes and rights, and also to set the date and time, and adjust some options of the keyboards – setting of the buzzer level, brightness, etc.
Every regular user in the system can change its own code only, while the Managers can change all other regular users’ codes. A Manager in the system cannot change other Manager’s code.

ECLIPSE Control Panels Series – User capability:

Control panel	Max. user codes	Code digits	Chief Manager	Max. Manager codes
ECLIPSE 8	8	4	1	1
ECLIPSE 32	64	4/6	1	Up to 64

Quick table for 1. Users Programming Menu

Address Number				Programming parameter	ECLIPSE 8	ECLIPSE 32
1	0	0	0	Code Length	×	✓
1	0	0	1	Code clone	×	✓
1	0	1	0	User 01 Options	✓	✓
1	0	1	1	User 01 Areas	×	✓
1	0	1	2	User 01 Name	✓	✓
1	0	1	3	User 01 Proxy	✓	✓
1	0	1	4	User 01 Time Slot	×	✓
1	0	2	0	User 02 Options	✓	✓
1	0	2	1	User 02 Areas	×	✓
1	0	2	2	User 02 Name	✓	✓
1	0	2	3	User 02 Proxy	✓	✓
1	0	2	4	User 02 Time Slot	×	✓
…						
1	0	8	0	User 08 Options	✓	✓
1	0	8	1	User 08 Areas	×	✓
1	0	8	2	User 08 Name	✓	✓
1	0	8	3	User 08 Proxy	✓	✓
1	0	8	4	User 08 Time Slot	×	✓
1	0	9	0	User 09 Options	×	✓
1	0	9	1	User 09 Areas	×	✓
1	0	9	2	User 09 Name	×	✓
1	0	9	3	User 09 Proxy	×	✓
1	0	9	4	User 09 Time Slot	×	✓
…						
1	6	4	0	User 64 Options	×	✓
1	6	4	1	User 64 Areas	×	✓
1	6	4	2	User 64 Name	×	✓
1	6	4	3	User 64 Proxy	×	✓
1	6	4	4	User 64 Time Slot	×	✓

CODE LENGTH

ADDRESS	1000
OPERATION	100
TEXT MENU	3. CODES – 3. CODE LENGTH

ECLIPSE 32

Code digits length
The system allows using 4 and 6 digits codes: engineer, maintenance and users.

Every pressing of a digital button or the arrows alternatively changes the digits number. The set parameter is confirmed with ENTER button.

At this address is assigned:

4 digits	The Engineer, maintenance and users are using 4 digit access codes.
6 digits	The Engineer, maintenance and users are using 6 digit access codes.

When switching from 4- to 6-digits code, the digits 00 will automatically be added at the end. For example, the 4-digits code 1234 will become 123400.

When changing over from 6- to 4-digits code, only the first four figures in the 4-digits code will remain valid. For example, the 6-digits code 123456 will become 1234. Due to risk of coincidence of codes, changing over from 6- to 4-digits code IS NOT RECOMMENDED!

Default setting: 4 digits

CODE CLONE

ADDRESS	1001
OPERATION	101
TEXT MENU	3. CODES – 4. CODE CLONE

ECLIPSE 32

User Codes Cloning
This is an address for coping (cloning) of attributes, rights, areas, time slots and control options for card readers for user codes. The user access codes are not automatically cloned – they have to be assigned for every one user separately from the Manager's programming menu.
The information for cloning is set in three digit sections with the following meaning:

```
1001>CODE CLONE
 [01]> [10] [20]
```

Source Code — First Code to clone — Last Code to clone

Source Code – This is the source code which parameters will be copied.
First Code to clone – This is the first code number to which the parameters of the source code will be assigned.
Last Code to clone – This is the last code number to which the parameters of the source code will be assigned.

It is possible to clone only serial number of codes. If it is necessary to clone parameters to one user code only, then enter 00 or the same user code in the "Last Code to clone" field. Press the ENTER button to start the cloning procedure.

Example:

```
1001>CODE CLONE
 [03]> [04] [10]
```

The source code is the User Code 03 and its parameters will be programmed in the settings of User Codes from 04 to 10 inclusive.

U1 OPTIONS

ADDRESS	1010
OPERATION	110+01
TEXT MENU	3. CODES – 1. USERS – 01. USER – 1. OPTIONS

User 01 Operation rights

User code 01 is the Chief Manager in the system and ***always has full rights for operation and programming of the system, which cannot be changed or erased!***

The following options are available for User Code 01:

1. DISARM ENABLE	The user has the right to disarm the system.
2. PART ARM ENABLE **Partial arming**	The user has the right to perform partial arming of the system – STAY or SLEEP Arming type.
3. BYPASS ENABLE **Zone Bypassing**	The user has the right to perform zone bypassing in system.
4. PROGRAM ENABLE	The user has the right to change its own access code, to review the memory LOG file, to bypass zones and other options.
5. N.A	
6. N.A	
7. N.A	
8. MANAGER ENABLE **MANAGER in the system**	The user code is Manager in the system – it has the right to change other user access codes and to access the Manager's programming menus.

Default settings: All rights are enabled

U1 AREAS

ADDRESS	1011
OPERATION	111+01
TEXT MENU	3. CODES – 1. USERS – 01. USER – 2. AREAS

Association of Areas to User 01

The engineer associates areas to User code 01 at this address. The User can operate (arm, disarm, bypass zones) only with area numbers associated to its code. One or several areas can be associated to the user code. To select area, press the corresponding to its number digit button. Next pressing of the same button will deselect the same area. The final configuration is confirmed with ENTER button.

The User code 01 is always associated to at least one area number. All other user codes will be inactive if there are no associated areas to them, irrespective of the assigned rights at the previous!

It is possible the associated area numbers to the control device (keyboard or card reader) to be different according to the area numbers associated to User code 01. In this case, the user code or proximity card can operate only in the common areas for the device and the code. For example, if to the user code all areas are associated in the system, and the associated to the control device areas are 1, 2, 3 and 4, then and the user code can operate only with them.

To associate all areas to the user press button "0" – the button alternatively switches over all enabled / all disabled state.

Default setting: AREA 1

U1 NAME

ADDRESS	1012
OPERATION	112+01
TEXT MENU	3. CODES – 1. USERS – 01. USER – 3. NAME

LCD

Programming of the User 01 Name

The engineer can enter a new name for User 01 at this address. The name has to be up 16 symbols – letters (small and capital), digits and special symbols, including spaces.
The letters can be entered directly by the digit buttons. The cursor moves automatically to the right after choosing of letter or digit, or may be moved manually by the arrows. To enter a digit, press the respective button and hold it for 2-3 seconds. See also item 2.8. Entering text for LCD Keyboard.
Confirm the new user name with ENTER button.

Default name: User 01

U1 PROXY

ADDRESS	1013
OPERATION	113+01
TEXT MENU	3. CODES – 1. USERS – 01. USER – 4. PROXY

Assigning rights for operation with proximity card for User code 01

The engineer assigns rights to User code 01 for operation (arm, disarm) with a proximity card. The settings at this address include operation with a built-in in a keyboard or standalone proximity reader.
According the settings at the address the user code can perform disarming and/ or arming the system.
The arming options are set as a combination of options 2 and 3.
To enable an option press the digit button corresponding to its number. The next pressing of the same button will deselect it.
The enabled option is indicated as digit on the LCD display or lighting on zone number on the LED display. The set options are confirmed with ENTER button.

The following options are assigned at this address:

1. DISARM	Authorization for the user code to Disarm the site with a proximity card. DISARM ENABLE (1) – The user code can disarm the site with a proximity card. DISARM DISABLE (✱) – The user code cannot disarm the site with a proximity card.
2. Proxy card ARMING options 3. Proxy card ARMING options	The options 2 and 3 are assigned in a certain combination to set the arming mode when using a proximity card:

2	3	Arming type
✱	✱	Arming is disabled
✱	3	Full Arming mode
2	✱	Stay Arming mode
2	3	Sleep Arming mode

Example:

```
1013>CD1_PROXY
   [1*3_____]
```

User code 01 can disarm the associated to it areas and to realize Full Arming when using a proximity card for system management.

Default settings: DISARM ENABLE; SLEEP ARM

U1 T.SLOT

ADDRESS	1014
OPERATION	114+01
TEXT MENU	3. CODES – 1. USERS – 01. USER – 5.TIMESLOT

ECLIPSE 32

Programming of time slot for User code 01

An access code timeslot is set.
The valid timeslot numbers are from 1 to 8. If the selected access code is not to be restricted by a timeslot, enter 0.
Use the digit buttons to enter the timeslot number. The entered number is confirmed with ENTER.
For programming of timeslots, see for details Menu. 5 Timeslot Programming.

Default settings: 0

User codes form 02 to 64 are programmed in an analogical way.
The rights of User codes set at addresses 1xx0 (110 + xx), where “xx” is a user number from 02 to 64, can be enabled or disabled according the system settings:

Uxx OPTIONS

ADDRESS	1xx0
OPERATION	110+xx
TEXT MENU	3. CODES – 1. USERS – xx. USER – 1. OPTIONS

User xx Operation rights
The following options are assigned for the User xx Code:

1. DISARM	DISARMING the site: DISARM ENABLE (1) – the user code has right to disarm the site DISARM DISABLE (✱) – the user code has not right to disarm the site
2. PART ARM **Partial arming**	Partial arming STAY or SLEEP type: PART ARM ENABLE (2) – the user code has right to realize partial arming STAY or SLEEP type PART ARM DISABLE (✱) – the user code has not right to realize partial arming STAY or SLEEP type
3. BYPASS **Zone Bypassing**	Bypassing zones in the site: BYPASS ENABLE (3) – the user code has right to bypass zones BYPASS DISABLE (✱) – the user code has not right to bypass zones
4. PROGRAM	Programming – change own code, reviewing the memory log, enabling/ disabling the “chime” sound signalization, zone bypassing: PROGRAM ENABLE (4) – the user code can realize programming PROGRAM DISABLE (✱) - the user code cannot realize programming
5. N.A	
6. N.A	
7. N.A	
8. MANAGER **MANAGER in the system**	Manager in the system – can program user codes and rights in the system, reviewing the memory log, zone bypassing: MANAGER ENABLE (8) – the code has Manager rights MANAGER DISABLE (✱) – the code has not Manager rights

ECLIPSE 32

When the option 8. MANAGER is enabled, it is obligatory to enable and option 4. PROGRAM!

To disable/ enable all user operation rights press button “0” – the button alternatively switches over all enabled / all disabled state.

Default settings:

User codes	ECLIPSE 8	ECLIPSE 32
02-08	1, 2 enabled	All enabled
09-10	×	
11-20		1, 2, 3 enabled
21-64		1, 2 enabled

2. Zones

In “ZONES” menu, the engineer programs some parameters and settings for the zones in the system.
Some of the addresses are available for programming only with LCD keyboard!

ECLIPSE Control Panels Series – Zones capability:

Control panel	Max. Zone	Connection styles	Doubling zones
ECLIPSE 8	8	5	×
ECLIPSE 32	32	9	✓

Quick table for 2. Zones Programming Menu

Address Number				Programming parameter	ECLIPSE 8	ECLIPSE 32
2	0	0	0	Zone Wiring	✓	✓
2	0	0	1	Zone Bypass	×	✓
2	0	0	2	Zone Instant	×	✓
2	0	0	3	Zone Pulse Count	×	✓
2	0	0	4	Zone Time Pulse Count	×	✓
2	0	0	5	Zone Cloning	×	✓
2	0	1	0	Zone 01 Attach	×	✓
2	0	1	1	Zone 01 Type	✓	✓
2	0	1	2	Zone 01 Areas	×	✓
2	0	1	4	Zone 01 Attributes 1	✓	✓
2	0	1	5	Zone 01 Attributes 2	✓	✓
2	0	1	6	Zone 01 Key switch	✓	✓
2	0	1	7	Zone 01 AUX Attributes	×	✓
2	0	1	8	Zone 01 Name	✓	✓
2	0	1	9	Zone 01 Line Resistance	✓	✓
2	0	2	0	Zone 02 Attach	×	✓
2	0	2	1	Zone 02 Type	✓	✓
2	0	2	2	Zone 02 Areas	×	✓
2	0	2	4	Zone 02 Attributes 1	✓	✓
2	0	2	5	Zone 02 Attributes 2	✓	✓
2	0	2	6	Zone 02 Key switch	✓	✓
2	0	2	7	Zone 02 AUX Attributes	×	✓
2	0	2	8	Zone 02 Name	✓	✓
2	0	2	9	Zone 02 Line Resistance	✓	✓
…						
2	3	2	0	Zone 01 Attach	×	✓
2	3	2	1	Zone 01 Type	×	✓
2	3	2	2	Zone 01 Areas	×	✓
2	3	2	4	Zone 01 Attributes 1	×	✓
2	3	2	5	Zone 01 Attributes 2	×	✓
2	3	2	6	Zone 01 Key switch	×	✓
2	3	2	7	Zone 01 AUX Attributes	×	✓
2	3	2	8	Zone 01 Name	×	✓
2	3	2	9	Zone 01 Line Resistance	×	✓

Z WIRING

ADDRESS	2000
OPERATION	200
TEXT MENU	4. INPUTS – 1. WIRING

Zone connection styles
Set connection style for zones – it is common for all used zones in the system, including the keyboard zones. Choose a number from according the realized zone connection.

ECLIPSE 8 supports only single connection in the zones.
ECLIPSE 32 supports both single and doubling connection in the zones.

Connection Style Diagrams:

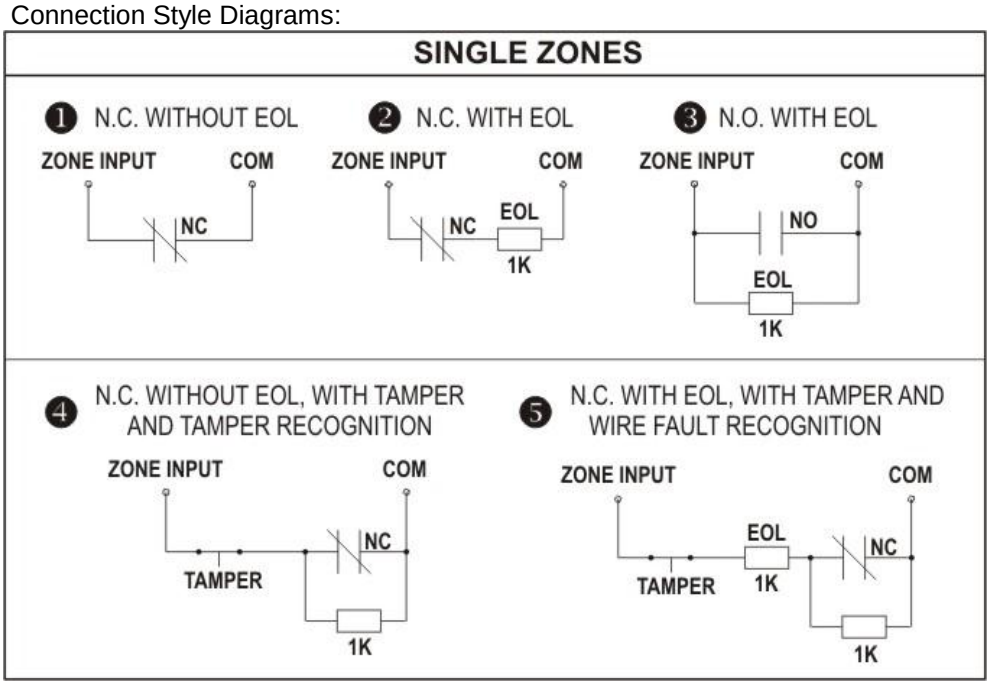

ECLIPSE 32

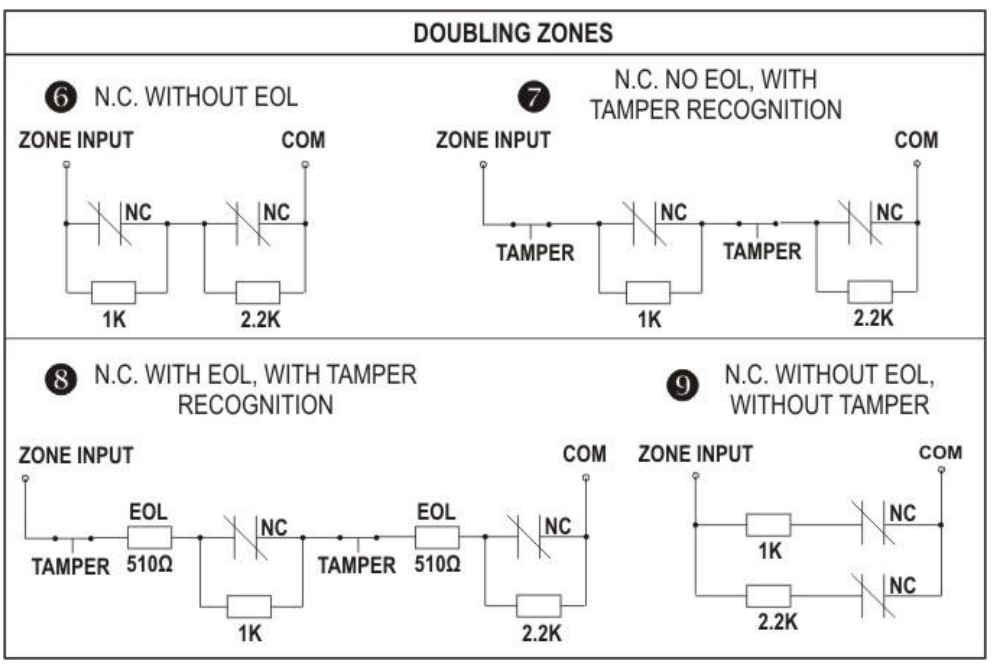

Default connection style: [2]

Z ABYPASS

ADDRESS	2001
OPERATION	201
TEXT MENU	4. INPUTS – 2. AUTO BYPASS

ECLIPSE 32

Number of Activations per Zone for Auto Bypass Mode
The number of activations (number of alarm cycles from 1 to 9) in one arm mode, which have to be accomplished for a zone with an assigned AUTOBYPASS parameter, are entered at this address. After reaching the set number of activations, the respective zone will be automatically bypassed.

When disarmed and then again armed the respective zone will remain armed.

The 0 value blocks the Zone AutoBypass mode even if there is set option “1. AUTOBYPASS” at address 2xx4, where xx is the zone number.

Default setting: [6]

Z INSTANT

ADDRESS	2002
OPERATION	202
TEXT MENU	4. INPUTS – 3. INSTANT

ECLIPSE 32

Enabling of Instant type zones
Intrusion in any Instant type zone during exit time is enabled or disabled at this address. Enabling this operating mode would reduce the probability for a false alarm signal to be triggered off by mistake on behalf of the user.
The parameter status can be changed with pressing of random button of the keyboard.

At this address, you set the parameter as:

DISABLE	Disabled intrusion in INSTANT type zones during exit time.
ENABLE	Enables intrusion in INSTANT type zones during exit time.

Default setting: DISABLE

Z PCOUNT

ADDRESS	2003
OPERATION	203
TEXT MENU	4. INPUTS – 4. PULSE COUNT – 1. PULSES

ECLIPSE 32

Number of activations in pulse count mode
The number of pulses in Pulse Count mode is assigned at this address.
Values between 1 and 9 pulses can be entered here.
The 0 value blocks the Pulse Count mode and zone can then function with the regular time for detecting activation.
The working algorithm for zone 4 in Pulse Count mode is described at ADDRESS 2015 – Zone 01 Attributes 2.

Default setting: [0]

Z TPCOUNT

ADDRESS	2004
OPERATION	204
TEXT MENU	4. INPUTS – 4. PULSE COUNT – 1. TIMEOUT

ECLIPSE 32

Time for zones in pulse count mode
A time for zones in Pulse Count mode is assigned at this address. Enter a time in interval 0-255 sec. See also ADDRESS 2015 - Zone 01 Attributes 2 for details.

Default setting: [000]

Z CLONE

ADDRESS	2005
OPERATION	205
TEXT MENU	4. INPUTS – 6. ZONE CLONE

ECLIPSE 32

Zone Cloning
This is an address for coping (cloning) of attributes, rights, areas and time slots from one to several zones.

The information for cloning is set in three digit sections with the following meaning:

```
2005>Z CLONE
 [01]> [02] [05]
```

Source Zone — FirstZone to clone — Last Zone to clone

Source Zone – This is the source zone which parameters will be copied.
First Zone to clone – This is the first zone number to which the parameters of the source zone will be assigned.
Last Zone to clone – This is the last zone number to which the parameters of the source zone will be assigned.

It is possible to clone only serial number of zones. If it is necessary to clone parameters to one zone only, then in the "Last zone to clone" field enter 00 or the same zone. Press the ENTER button to start the cloning procedure.

Example:

```
2005>Z CLONE
 [02]> [03] [05]
```

The source zone is Zone 02 and its parameters will be programmed in the settings of zone numbers from 03 to 05 inclusive.

Z1 ATTACH

ADDRESS	2010
OPERATION	210 + 01
TEXT MENU	4. INPUTS – 5. ZONE – 01. ZONE – 1. ATTACH

ECLIPSE 32

Number of device and Zone 01 input number
The installer can review the device number and its input/ output number associated to the zone. The numbers are entered through the digital buttons and confirmed with ENTER – see also the Table in APPENDIX A.

Zones from 01 to 08 are the on board zones and they are fixed at ADDRESSES 2010 to 2080. The contents of ADDRESSES 2010 – 2080 cannot be changed. The first digit performs the ID number of the device and the second performs the physical input attached to the zone number. Zones 01 – 08 are the physical inputs placed on the control panel so they are displayed as:
Zone 01: [1] [1] – The zone is attached to the 1st input of device 01 (the control panel);
Zone 02: [1] [2] – The zone is attached to the 2nd input of device 01 (the control panel), and so on.

Zones from 09 to 32 can be on board zone inputs on zone expander or keyboard, or logical when using doubling zone connection in the system. The contents of ADDRESSES 2090 – 2320 are freely programmable according the system configuration – see the examples after this address description.

In the maximal configuration of ECLIPSE 32 can be attached and programmed up to 32 zone numbers – that depends on the used connection style and addressed devices.

In case the PGM4 is programmed as fire zone (ADDRESS 3000) that zone will be attached to device 01 (the control panel) as zone number 99. The installer can attach that fire zone to anyone free zone as at the ADDRESS 2xx0 programs [01] for device and [99] for input/ zone number.

Setting of device and input/ zone number for a keyboard
All ECLIPSE Series keyboards have an additional zone input appropriate for connecting of magnetic contacts or other devices. The keyboard zone takes all common setting for zones. To add the keyboard zone to the system configuration you must first to attach it to a zone address and device ID number – the device in this case is the keyboard. According to the system configuration, the

keyboard zone can be attached to any free zone at address 2xx0, where xx is a zone number from 09 to 32.

Example 1. At address 8020 (Device 02) to the control panel is enrolled a keyboard with one on board zone input. Choose a free zone in the system configuration, number 15 for example, where to attach the keyboard zone. Enter in the engineer programming menu, type address 2150, enter in sequence number of device 02, and input number 01. The screen displays:

```
2150>Z15 ATTACH
    [02] [01]
```

Example 2. At address 8100 (Device 10) to the control panel is enrolled a zone expander with 8 hardware zone inputs. Choose a free zone in the system configuration, number 20 for example, where to attach the first zone of the expander. Enter in the engineer programming menu, type address 2200, enter in sequence number of device 10, and input number 01. The screen displays:

```
2200>Z20 ATTACH
    [10] [01]
```

To use the second zone input of the same expander you have to attach it to the next free zone in the system configuration – for example 21. Then at address 2210, you should enter in sequence number of device 10 and input number 02. In analogical way proceed with the other zone inputs of the expander to attach them to free zones in the system configuration.

Z1 TYPE

ADDRESS	2011
OPERATION	201 + 01
TEXT MENU	4. INPUTS – 5.ZONE – 01. ZONE – 2. TYPE

The type of ZONE 01 is set at this address.

Only one type can be selected for a zone!

Press the digital button, which corresponds to the number of the desired type.

No	Type	Description
0	UNUSED	The zone is not used.
1	ENTRY/ EXIT	**Entry- Exit zone.** Provides time to arm and disarm the site. After arming, the detector, which was triggered off in this zone, will not sound an alarm until the programmed EXIT TIME expires for the Area (or Areas) to which the zone is attached. No violation of the zone when in armed mode will sound an alarm before the programmed ENTRY TIME expires for the Area (or Areas) to which the zone is attached. A sound signal is activated from the keyboard buzzer during entry and exit time. In SLEEP ARMING mode, the entry-exit type zones become instant and no entry or exit time starts running when violation in the zone accures – the programmable ALARM and SIREN type outputs, and the communicator are activated at once.
2	FOLLOW	**Follow zone.** An alarm zone which is active only when the site is armed. The zone operates instantaneously and activates the programmable ALARM and SIREN type outputs, and the communicator. Activating the zone during entry or exit time does not cause an alarm event. The entry time will start running if the follow type zone is activated while the system is in SLEEP ARMING mode. When the system is disarmed, the activation of a zone is indicated by blinking of the respective light-emitting diode for the zone (LED

		keyboards) or displayed zone name and number (LCD keyboards) for the time that the zone remains open (The displayed mode can be disabled for Eclipse 32 control panel at the address 8xx2 – keyboard options).
3	INSTANT	**Instant zone.** An alarm zone which is active only when the site is armed. The zone operates instantaneously and activates the programmable ALARM and SIREN type outputs, and the communicator. When the system is disarmed, the activation of the zone is indicated with active zone number for the time that the zone remains open. An INSTANT type zone can be violated during Exit time running if at ADDRESS 2002 (OPERATION 202) the "Enabled Instant" parameter is enabled.
4	FIRE	**24 – hour fire type zone.** Allows connecting 12V fire detectors to the system. These should avail of a normally closed relay output in inactive status. Any activation of the zone will trigger off SIREN type outputs, the programmable FIRE type outputs and the digital communicator. The 24-hour fire type zones are with the highest priority in the system and are indicated at first place.
5	PANIC	**24 – hour panic type zone.** Activating the zone will trigger off the PANIC type outputs, the SIREN type outputs and the built-in digital communicator. The PANIC type zones operate in “Silent panic” mode when “3. Report only” option is set at address 2xx5 – Setting of Attributes 2, where xx is the zone number. In this case, the zone activation is not indicated on the keyboards (sound or LED indication), and only the digital communicator will send an alarm message to the monitoring station. After entering of valid user code the MEMORY button (LED) lights on together with the LED/ number of the activated zone and area. The indication of the memory can be deleted by entering a valid user code, a manager code or during the next arming.
6	TAMPER	**24 – hour tamper type zone.** Activating this zone type triggers off the SIREN output, the programmable TAMPER type outputs and the station communicator. When the system is disarmed and the TAMPER type output is programmed as “DISABLE” at **ADDRESS 0016 (OPERATION 016) – Sound TAMPER**, the activation of the zone will not be indicated on the keyboards (sound or display indication), and only the digital communicator will send an alarm message to the monitoring station. In case the TAMPER type output is programmed as “ENABLED” at address 0016, the activation of the zone will cause a sound signal from the keyboards in DISARM mode.
7	MEDICAL	**24 – hour medical type zone.** Assigning this zone type will set the programmable MEDICAL and SIREN type outputs active and will start the communicator. The number of activated zone is displayed irrespective of the system status. The MEDICAL type zones operate in “Silent Panic” mode when the attribute “3. Report only” is set at address 2xx5 – Setting of Additional attributes, where “xx” is the zone number. In this case, the activation of the zone will not be indicated on the keyboards (sound or display indication), and only the digital communicator will send an alarm message to the monitoring station. After entering of valid user code the MEMORY button (LED) lights on together with the LED/ number of the activated zone and area. The indication of the memory can be deleted by entering a valid user code, a manager code or during the next arming.
8	KEY-SWITCH	**Key-switch type, 24–hour alarm zone.** When this zone type is assigned, the respective panel input is used to transmit the arming and disarming signal with the help of a key-switch. The installer sets the type of the zone activation:

		• With an impulse (PULSE attribute is set at ADDRESS 2016); • Reaction of open or in normal operation mode zone (LATCH attribute is set at ADDRESS 2016). Arming is only possible in Full Arm mode. Arming will be anticipated only when the system is ready - all zones are inactive. The additional attributes for key-switch type zone is programmed at address 2xx6 (OPERATION 216 + 01), where “xx” is the number of the zone.
9	AUXILIARY	**24-hour auxiliary type zone** When this zone type is assigned, respectively a number of AUX attribute should be programmed at ADDRESS 2xx7, where xx is the number of the zone (OPERATION 217 + xx).

Default setting:

	Type	
Zone number	**ECLIPSE 8**	**ECLIPSE 32**
01	2	1
02	3	2
03	3	0
04	3	0
05	5	0
06	6	0
07	1	0
08	1	0
09-32	×	0

Z1 AREAS

ADDRESS	2012
OPERATION	212 + 01
TEXT MENU	4. INPUTS – 5. ZONE – 01. ZONE – 3. AREAS

ECLIPSE 32

Association of Areas to Zone 01
According the system configuration the engineer associates one or several AREA numbers for operation with ZONE 01. To select an AREA press the digit button corresponding to its number. The next pressing of the same button will deselect the AREA.

To select all areas press button “0” – the button alternatively switches over all enabled / all disabled state.

The zone will be inactive if there are no associated areas to it!

Default setting: AREA 1

Z1 ATTR 1

ADDRESS	2014
OPERATION	214 + 01
TEXT MENU	4. INPUTS – 5. ZONE – 01. ZONE – 4. OPTIONS 1

Setting of Main Attributes for Zone 01
According the system configuration the engineer sets a range of main attributes for ZONE 01. More than one attribute can be assign to the zone but it depends on its type. To select an attribute press the digit button corresponding to its number. The next pressing of the same button will deselect the attribute.

To select all attributes press button “0” – the button alternatively switches over all enabled / all disabled state.

The Attributes from 1 to 7 can be assigned only for certain zone types – see the table below for zone type compatibility! *Some of the Attributes are not available in ECLIPSE 8 control panel.*

The following Attributes are available for setting at this address:

No	Attribute	Description
1	Auto BYPASS	Authorization for automatic Bypassing the zone after reaching the number of activations per armed mode as set at address 2001 (OPERATION 201) for an arming mode.
2	BYPASS	Authorization to Bypass a zone. Assigning this attribute to the respective zone will authorize bypass of the zone on behalf of the system user or manager.
3	Stay ARM	The zone is not going to be armed in the STAY mode. Assigning this attribute will authorize bypassing of the zone during Stay arming mode.
4	Sleep ARM	The zone is not going to be armed in the SLEEP mode. Assigning this attribute will authorize bypassing of the zone during SLEEP arming mode.
5	Force ARM	If when arming the system the zone is open (activated), then the respective AREA will be armed, and the respective zone will be armed after its restoration.
6	DOUBLE KNOCK	DOUBLE KNOCK type zone. Assigning this attribute to the respective zone authorizes Double Knock mode performance in the zone. A 1 to 5-minute time interval (set at ADDRESS 4001) starts when a detector in the zone is activated for the first time when the system is armed. An alarm event is registered if second detector activation is recorded within this interval in the same or another zone. An alarm event will also be registered if no zone is restored within 15 sec. of the first activation of the zone.
7	E/E FINAL	When armed the zone will perform as Entry/Exit type. The system will be armed: A) When the exit time is over; B) Immediacy after closing the entry-exit zone.
8	FAST/ REGULAR	Programmable sensitivity of the zone – choose between 64ms (fast) and 256ms (regular). ***Indication:*** **LCD:** REGULAR – ✱ / FAST – 8 **LED:** REGULAR – ⑧/ FAST – ❽

Default setting: 2. BYPASS

Z1 ATTR 2

ADDRESS	2015
OPERATION	215 + 01
TEXT MENU	4. INPUTS – 5. ZONE – 01. ZONE – 5. OPTIONS

Setting of Additional Attributes for Zone 01
According the system configuration the engineer sets a range of additional attributes for ZONE 01. More than one attribute can be assign to the zone. To select an attribute press the digit button corresponding to its number. The next pressing of the same button will deselect the attribute.

To select all attributes press button "0" – the button alternatively switches over all enabled / all disabled state.

Some of the Attributes are not available in ECLIPSE 8 control panel.

The following Attributes are available for setting at this address:

No	Attribute	Description
1	Bell Delay	The siren will be activated when the set Bell Delay time is over. The Bell Delay time can be programmed at **ADDRESS 4xx8 (for Partition A), where xx is the area number.**

2	Fire Delay	The siren and outputs siren type will be activated but the communicator starts waiting for 30 up to 90 seconds according the fire delay operation algorithm – refer to the algorithm diagram in APPENDIX C.
3	Report Only	**Silent alarm.** Only the programmable outputs PANIC type and the internal communicator are activated. There is no memory indication on the keyboards. After entering of valid user code the MEMORY button (LED) lights on together with the number of the activated zone.
4	Video on ARMED	**Video recording of alarm events** In case of alarm event the VIDEO ON ARMED outputs will be activated for 1 minute.
5	Write to LOG	**Write to LOG file** Every zone activation and restoring, irrespective of the system arming status, will be recorded in the system LOG file. The attribute “Write to log” concerns the events OPEN (zone activation) and CLOSE (zone restoring). This attribute is valid for all type of zones except the zones TAMPER type. If the zone is set with TAMPER type (at ADDRESS 2xx1 is set type 6) the programming of this attribute has no matter.
6	Chime	**“Chime” mode.** This parameter enables the sound signalization (Chime) for opening of an entry-exit type zone when the system is disarmed.
7	Pulse Count	**Pulse count mode**. This setting provides counting of short impulses 2- 4ms for the programmed time at ADDRESS 2004 (OPERATION 204). The number of impulses is set at ADDRESS 2003 (OPERATION 203) as value in range 1 to 9. The 0 value blocks the Pulse Count mode and the zone can then function with the regular time for detecting activation. When the counter reaches the set number of impulses in the programmed period, an alarm is triggered off. If the number of pulses is not reached in the programmed period, the counter is restored. This operation mode is applicable for connecting of rolling shutters detector to the zone. The wiring diagram for connecting of rolling shutters detector is: 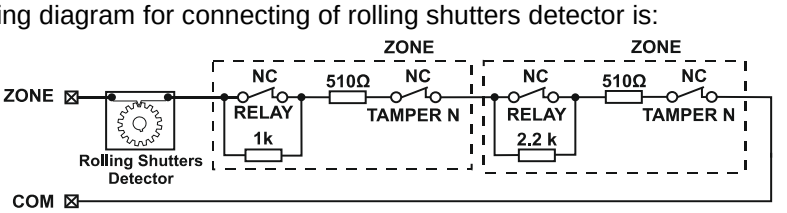
8	Power up Delay	The zone will be bypassed for a 120 second period after power-up of the system (that eliminated the false alarms in the initial power-up of the control panel).

Default setting: 8. POWER UP DELAY

Table for Availability of Attributes according the zone type:

	Attribute	Zone Type								
		Entry/ Exit	Follow	Instant	Fire	Panic	Tamper	Medical	Key-Switch	AUX
Main	1. AutoBypass	✓	✓	✓	×	×	×	×	×	×
	2. Bypass	✓	✓	✓	✓	✓	✓	✓	×	✓
	3. Stay ARM	✓	✓	✓	×	×	×	×	×	×
	4. SLEEP ARM	✓	✓	✓	×	×	×	×	×	×
	5. Force ARM	×	×	✓	×	×	×	×	×	×
	6. DOUBLE	×	✓	✓	×	×	×	×	×	×
	7. E/E Final	✓	×	×	×	×	×	×	×	×
	8. Fast/ Regular	✓	✓	✓	✓	✓	✓	✓	✓	✓
Add	3. Report only	×	×	×	×	✓	×	✓	×	✓

Z1 KSWITCH

ADDRESS	2016
OPERATION	216 + 01
TEXT MENU	4. INPUTS – 5. ZONE – 01. ZONE – 6. KEY SWITCH

Setting of Key-Switch Attributes for Zone 01

At this address are assigned **only attributes for Key-Switch type zone**.
More than one attribute can be assigned for the zone. Pressing a digital button with the respective number will activate a given attribute. Every activated attribute number is indicated as a lighting on LED or display the zone name and number. Pressing the same digital button again will deactivate the attribute.

☞ *To select all attributes press button "0" – the button alternatively switches over all enabled / all disabled state.*

The following Attributes are available for setting at this address:

No	Attribute	Description
1	PULSE/ LATCH	**24-hour Key-Switch type zone.** ***With assigned Pulse attribute (∗) -*** every impulse will change alternatively the arming status of the system - respectively armed/ disarmed. ***With assigned Latch attribute (1)*** - if the zone is activated - the area(s)* is armed, if the zone is in normal operating status - the area(s)* is disarmed. **The area(s) to which the zone is associated.* *If the zone is attached to several areas in the system, its reaction will depend on their current status.*
2	Key SWITCH ARM type	**Setting the ARMING type** The attributes 2 and 3 are set in a certain combination for programming the Arming type of the Key-Switch type zone:
3	Key SWITCH ARM type	

2	3	Arming type
∗	∗	Not used
∗	3	Full Arming mode
2	∗	Stay Arming mode
2	3	Sleep Arming mode

4	DISARM	This attribute determinates whether the zone will disarm the system: DISARM ENABLED (4) or not - DISARM DISABLED (∗).
5	NORMAL/ INVERT	Normal or inverted operation of the zone. In case of setting the INVERT (5) attribute, the system will be disarmed in zone activation.

Default setting: 1. PULSE, 5. NORMAL

Z1 AUX

ADDRESS	2017
OPERATION	217 + 01
TEXT MENU	4. INPUTS – 5. ZONE – 01. ZONE – 7. AUXILIARY

ECLIPSE 32

Setting of Auxiliary Attributes for Zone 01

At this address are assigned **only attributes for Auxiliary type zone**.

Only one attribute AUX can be assigned at this address - a number from 0 to 9. To assign an AUX attribute press the respective digital number. The entered attribute is confirmed with ENTER.

The following Attributes are available for setting at this address:

No	Attribute	Description
0	**24h Burglary alarm zone**	With this attribute assigned, the zone will be active irrespective of the arming type. The zone will operate as SLEEP type and the programmable ALARM and SIREN outputs, and the system communicator will be activated.
1	**AC loss**	Main power supply lost.
2	**Battery low**	Low battery charging level.
3	**Water leakage**	Activated flood detector.
4	**Gas detector**	Activated gas detector.
5	**GSM link trouble**	GSM communication failure.
6	**Low Bottled Gas Level**	Activated low bottled gas detector.
7	**High Temperature**	High temperature in the premises.
8	**Low Temperature**	Low temperature in the premises.
9	**Loss of Heat**	Loss of heat in the premises.

Default setting: 0. 24h Burglary

Z1 NAME

ADDRESS	2018
OPERATION	218 + 01
TEXT MENU	4. INPUTS – 5. ZONE – 01. ZONE – 8. NAME

LCD

Programming of the Zone 01 Name

The engineer can enter a new name for Zone 01 at this address. The name has to be up 16 symbols – letters (small and capital), digits and special symbols, including spaces.
The letters can be entered directly by the digit buttons. The cursor moves automatically to the right after choosing of letter or digit, or may be moved manually by the arrows. To enter a digit, press the respective button and hold it for 2-3 seconds. See also item 2.8. Entering text for LCD Keyboard. Confirm the new zone name with ENTER button.

Default name: Zone 01

Z1 LINE

ADDRESS	2019
OPERATION	219 + 01
TEXT MENU	4. INPUTS – 5. ZONE – 01. ZONE – 9. LINE RESIST

LCD

Checking the line resistance

The engineer can check the line resistance of the zone at this address. It is suitable to perform diagnostics of the zone troubles. The displayed value can vary according the used hardware connection style in the system and has the following meaning:

Connection style		Displayed value	Description
Single zone connection	1	< 1.5 kΩ	The zone is closed.
		> 1.5 kΩ	The zone is open.
	2	< 0.75 kΩ	Tamper short-circuit.
		0.75 – 1.5 kΩ	The zone is closed.
		> 1.5 kΩ	The zone is open.
	3	< 0.75 kΩ	The zone is open.
		0.75 – 1.5 kΩ	The zone is closed.
		> 1.5 kΩ	Tamper break down.
	4	< 0.75 kΩ	The zone is closed.
		0.75 – 5.6 kΩ	The zone is open.
		> 5.6 kΩ	Tamper break down.
	5	< 0.75 kΩ	Tamper short-circuit.
		0.75 – 1.5 kΩ	The zone is closed.
		1.5 - 5.6 kΩ	The zone is open.
		> 5.6 kΩ	Tamper break down.
Double zone connection	6	< 0.5 kΩ	The both zones are closed.
		0.5 – 1.5 kΩ	The 1st zone is open, the 2nd zone is closed.
		1.5 – 2.7 kΩ	The 1st zone is closed, the 2nd zone is open.
		2.7 kΩ - ∞	The both zones are open.
	7	< 0.5 kΩ	The both zones are closed.
		0.5 – 1.5 kΩ	The 1st zone is open, the 2nd zone is closed.
		1.5 – 2.7 kΩ	The 1st zone is closed, the 2nd zone is open.
		2.7 – 4.9 kΩ	The both zones are open.
		> 4.9 kΩ	Tamper break down.
	8	< 0.75 kΩ	Tamper short-circuit.
		0.75 – 1.5 kΩ	The both zones are closed.
		1.5 – 2.5 kΩ	The 1st zone is open, the 2nd zone is closed.
		2.5 – 3.7 kΩ	The 1st zone is closed, the 2nd zone is open.
		3.7 – 4.9 kΩ	The both zones are open.
		> 4.9 kΩ	Tamper break down.
	9	< 0.5 kΩ	Tamper short-circuit.
		0.5 - 0.75 kΩ	The both zones are closed.
		0.75 - 1.5 kΩ	The 1st zone is closed, the 2nd zone is open.
		1.5 – 2.7 kΩ	The 1st zone is open, the 2nd zone is closed.
		> 2.7 kΩ	The both zones are open.

ECLIPSE 32

See also APPENDIX E.

The ZONES with numbers from 02 to 08 for ECLIPSE 8 and from 02 to 32 for ECLIPSE 32 are programmed in an analogical way.

3. PGM Outputs

In “PGM Outputs” menu, the engineer programs some parameters and settings for the programmable outputs in the system.

Some of the addresses are available for programming only with LCD keyboard!

Attention: In Eclipse 32 control panel, the PGM5 output is powerful (up to 1A) and is set by default as a monitored output for siren connection. If after the initial power-up no siren is connected to the PGM5 output, the system will display a system trouble “8. SIREN FAULT”. In case the PGM5 is not used for siren connection it has to be terminated with 1kOm resistance or programmed as general output at address 3051. See also the example below the description of address 3011.

ECLIPSE Control Panels Series – PGM capability:

Control panel	Max. PGM outputs	Power output, up to 1A
ECLIPSE 8	5	1 (PGM 5), non monitored
ECLIPSE 32	32	1 (PGM 5), monitored

Quick table for 3. PGM Outputs Programming Menu

Address Number				Programming parameter	ECLIPSE 8	ECLIPSE 32
3	0	0	0	PGM 04 Option	✓	✓
3	0	1	0	PGM 01 Attach	×	✓
3	0	1	1	PGM 01 Options	✓	✓
3	0	1	2	PGM 01 Areas	×	✓
3	0	1	3	PGM 01 Activation event	✓	✓
3	0	1	4	PGM 01 Activation event – Param 1	✓	✓
3	0	1	5	PGM 01 Activation event – Param 2	✓	✓
3	0	1	7	PGM 01 De-activation timer	×	✓
3	0	1	9	PGM 01 Delay	×	✓
3	0	2	0	PGM 02 Attach	×	✓
3	0	2	1	PGM 02 Options	✓	✓
3	0	2	2	PGM 02 Areas	×	✓
3	0	2	3	PGM 02 Activation event	✓	✓
3	0	2	4	PGM 02 Activation event – Param 1	✓	✓
3	0	2	5	PGM 02 Activation event – Param 2	✓	✓
3	0	2	7	PGM 02 De-activation timer	×	✓
3	0	2	9	PGM 02 Delay	×	✓
…						
3	3	2	0	PGM 32 Attach	×	✓
3	3	2	1	PGM 32 Options	×	✓
3	3	2	2	PGM 32 Areas	×	✓
3	3	2	3	PGM 32 Activation event	×	✓
3	3	2	4	PGM 32 Activation event – Param 1	×	✓
3	3	2	5	PGM 32 Activation event – Param 2	×	✓
3	3	2	7	PGM 32 De-activation timer	×	✓
3	3	2	9	PGM 32 Delay	×	✓

PGM OPTION

ADDRESS	3000
OPERATION	300
TEXT MENU	5. OUTPUTS – 1. PGM OPTION

Programming the type of PGM 04
The PGM 04 can be configured with different functionality for the ECLIPSE panels at this address. See the descriptions below to orientate in the available option settings.

ECLIPSE 8

PGM 04 in the ECLIPSE 8 control panel can be used as a general programmable output or for serial connection to TP2000 radio transmitter. The serial link is realized with connection between the AC terminal of the transmitter and PGM 04 at the control panel.

At this address for ECLIPSE 8 you set the option:

2. SERIAL LINK	The serial link between the control panel and TP2000 transmitter is enabled. Press button 2 to enable the option – the digit is displayed on the LCD screen or lights on the LED display. Next pressing of the same button will disable the option – an asterisk (✱) is displayed on the LCD screen and no zone number on the LED display is lighting.

ECLIPSE 32

PGM 04 in the ECLIPSE 32 control panel can be used as a general programmable output or for two-wire connecting of fire detectors using 24V fire base.

At this address for ECLIPSE 32 you set the option:

1. FIRE ZONE	The fire zone provides two-wire connection using 24V fire bases. Press button 1 to enable the option – the digit is displayed on the LCD screen or lights on the LED display. Next pressing of the same button will disable the option – an asterisk (✱) is displayed on the LCD screen and no zone number on the LED display is lighting.

In case the PGM4 is programmed as fire zone in Eclipse 32 control panel, that zone will be attached to device 01 (the control panel) as zone number 99. The installer can attach that fire zone to anyone free zone as at the ADDRESS 2xx0 programs [01] for device and [99] for input/ zone number.

Default: PGM 04 is configured as general output

PGM 01 ATTACH

ADDRESS	3010
OPERATION	310 + 01
TEXT MENU	5. OUTPUTS – 2. PGMs – 01. PGM – 1. ATTACH

ECLIPSE 32

Number of device and PGM 01 output number
The installer can review the device number and its input/ output number associated to the output. The numbers are enter through the digital buttons and confirmed with ENTER.

PGMs from 01 to 05 are the on board outputs on the control panel and they are fixed at ADDRESSES 3010 to 3050. The contents of ADDRESSES 3010 – 3050 cannot be changed. The first digit performs the ID number of the device and the second performs the physical output attached to the PGM number. PGMs 01 – 05 are the physical outputs placed on the control panel so they are displayed as:
PGM 01: [1] [1] – The output is attached to the 1st output of device 01 (the control panel);
PGM 02: [1] [2] – The output is attached to the 2nd output of device 01 (the control panel), and so on.

PGMs from 06 to 32 can be on board PGM outputs on PGM expander or keyboard (LCD 32 or LCD 32S). The content of ADDRESSES 3060 – 3320 is freely programmable according the system configuration – see the examples after this address description.

In the maximal configuration of ECLIPSE 32 can be attached and programmed up to 32 output numbers – that depends on the number of used PGM expander modules.

Setting of device and output number for a keyboard or expander module
The LCD 32 and LCD 32S ECLIPSE Series keyboards have and additional PGM output appropriate for connecting of control or signal devices. The keyboard PGM takes all common setting for PGM outputs. To add a keyboard PGM output to the system configuration it must be first

attached to a PGM address and device – the device in this case is the keyboard ID number. According to the system configuration the keyboard PGM can be attached to any free PGM number at address 3xx0, where xx is a PGM number from 06 to 32.

Example 1. At address 8020 (Device 02) to the control panel is enrolled a keyboard with one on board PGM output. Choose a free PGM address in the system configuration, number 15 for example, where to attach the keyboard PGM. Enter in the engineer programming menu, type address 3150, enter in sequence number of device 02, and input number 01. The screen displays:

```
3150>P15 ATTACH
    [02] [01]
```

Example 2. At address 8100 (Device 10) to the control panel is enrolled a PGM expander with 8 on board PGM outputs. Choose a free PGM output in the system configuration, number 20 for example, where to attach the first output of the expander. Enter in the engineer programming menu, type address 3200, enter in sequence number of device 10, and input number 01. The screen displays:

```
3200>P20 ATTACH
    [10] [01]
```

To use the second PGM output of the same expander you have to attach it to other free PGM address in the system configuration – for example 21. Then at address 2210 you should enter in sequence number of device 10 and input number 02. In analogical way, proceed with the other PGM outputs of the expander to attach them to free PGM addresses in the system configuration.

The attached PGM outputs cannot be programmed for operation as a fire zone like PGM4.

PGM 01 OPTION

ADDRESS	3011
OPERATION	311 + 01
TEXT MENU	5. OUTPUTS – 2. PGMs – 01. PGM – 2. OPTIONS

Programming of PGM 01 Options

The engineer sets a number of options for operation of the PGM 01 at this address. More than one option is available to set. To select the option press the digit button corresponding to its number. The selected options are confirmed with ENTER button.

Pay attention that both of the option statuses are used – see the description of the options in the table below. The option numbers 3, 4 and 5 are available only for ECLIPSE 32 control panel.

The following Options are available for setting at this address:

No	Option	Description
1	GENERAL OUTPUT/ SIREN	The option concerns the operation of PGM 01 as output: **GENERAL OUTPUT** (✱) – PGM1 operates as general output. **SIREN** (1) – PGM1 operates as siren output. With setting this option, the PGM 01 takes all common settings for sirens in the system and the settings for activation and deactivation events at addresses 3013 - 3018 are not used. The output is activated, when there is an alarm event in zones associated to areas assigned to PGM 01 at ADDRESS 3012.
2	POLARITY NORMAL/ INVERT	The option concerns the active state of PGM 01: **NORMAL** (✱) – The active state of the output is at high level (+12V). **INVERT** (2) - The active state of the output is at low level (0V).

3	DELAY sec / min	This option concerns the set value at ADDRESS 3019 – time delay for activation of PGM 01: **DELAY seconds** (✱) – the set time delay at address 3019 is measured in seconds. **DELAY minutes** (3) – the set time delay at address 3019 is measured in minutes.
4	PULSED FIRE ENABLE	This option is available when the PGM 01 is set as a siren output. When the option is enabled, the output operates in a specific working mode: 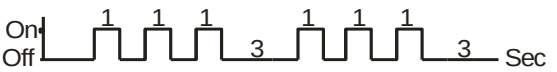 **PULSED FIRE DISABLE** (✱) – The option is not active **PULSED FIRE ENABLE** (4) – The option is active
5	Deact. Timer	This option concerns the set value at ADDRESS 3017 – deactivation timer for PGM 01: **Deact. Timer seconds** (✱) – the set time at address 3017 is measured in seconds. **Deact. Timer minutes** (5) – the set time at address 3017 is measured in minutes.

For LED keyboards: The option status "✱" is performed with non-lighting zone number.

Default settings: 1. GENERAL OUTPUT, 2. POLARITY NORMAL (+12V), 3. DELAY sec, 4 PULSED FIRE DISABLED, 5. DEACT. TIMER sec.

By default PGM 05 is programmed as a siren output – at address 3051 is set "1". If after the initial power-up of the control panel, no siren is connected to PGM 05 output, the system will display a trouble message "8. SIREN FAULT". In case the PGM 05 will be used as a general output, the setting at address 3051 must be programmed as "✱". You can leave the set by default option, but to void the displayed trouble message in that case terminate the PGM 05 output with 1kOm resistance – you can find one in the supplied spare parts kit.

Example:

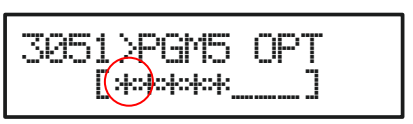

Output with general purpose

Siren output

PGM 01 AREAS

ADDRESS	3012
OPERATION	312 + 01
TEXT MENU	5. OUTPUTS – 2. PGMs – 01. PGM – 3. AREAS

Association of Areas to PGM 01

According the system configuration the engineer associates one or several AREA numbers for operation with PGM 01. To select an AREA press the digit button corresponding to its number. The next pressing of the same button will deselect the AREA.

To select all areas press button "0" – the button alternatively switches over all enabled / all disabled state.

The PGM will be inactive if there are no associated areas to it!

Default setting: AREA 1

At ADDRESSES 3013, 3014 and 3015 is set a number of an activation event for PGM 01 output and supplementary parameters depending on the set event – for zones, areas, users, troubles or other special ones.

The programmed activation events make sense when the PGM 01 output is programmed as general output – at ADDRESS 3011 is set "✱" – see the description of the option above.

The types of the activation events are described in details in Table 1.

PGM 01 ACT

ADDRESS	3013
OPERATION	313 + 01
TEXT MENU	5. OUTPUTS – 2. PGMs – 01. PGM – 4. ACTIVATION

Programming a number of activation event for PGM 01

Choose a number of an activation event according the Table 1. Use the digit buttons to enter the event number. Press the ENTER to confirm.

☞ *The default content of the next two addresses (3014 and 3015) depends on the set number at this address.*

Default setting: 27 – Alarm in Area

PGM 01 ACT P1

ADDRESS	3014
OPERATION	314 + 01
TEXT MENU	5. OUTPUTS – 2. PGMs – 01. PGM – 5. ACT. PARAM 1

Programming of Parameters 1 of the activation event for PGM 01

The type of Parameters 1 depends on the set activation event at ADDRESS 3013 – see Table 1 for details.

Default setting: All parameters for event 27

PGM 01 ACT P5

ADDRESS	3015
OPERATION	315 + 01
TEXT MENU	5. OUTPUTS – 2. PGMs – 01. PGM – 6. ACT. PARAM 2

Programming of Parameters 2 of the activation event for PGM 01

The type of Parameters 2 depends on the set activation event at ADDRESS 3013 – see Table 1 for details.

Default setting: n.a.

PGM 01 DEACT. TM

ADDRESS	3017
OPERATION	317 + 01
TEXT MENU	5. OUTPUTS – 2. PGMs – 01. PGM – 7. DEACT TIMER

ECLIPSE 32

Deactivation timer for PGM 01 – setting a time for deactivation the event programmed at address 3013

A deactivation timer for the programmed at ADDRESS 3013 event is set at this address. The state of PGM 01 will restore after the set time is over. The engineer enters time in range 000 – 255 as the time unit (seconds or minutes) depends on the settings at ADDRESS 3011, option 5. By default, the programmed time unit is in seconds.

Default setting: [000]

PGM 01 DELAY

ADDRESS	3019
OPERATION	319 + 01
TEXT MENU	5. OUTPUTS – 2. PGMs – 01. PGM – 8. DELAY

ECLIPSE 32

Time delay for activation of PGM 01

A time delay for the programmed at ADDRESS 3013 event is set at this address. The activation of PGM 01 will be delayed in time. The engineer enters time in range 000 – 255 as the time unit (seconds or minutes) depends on the settings at ADDRESS 3011, option 3. By default, the programmed time unit is in seconds.

Default setting: [000]

TABLE 1. Events Type

In case of setting of activation event and missing deactivation event (0), the PGM output restores in the way described for the activation event!

ADDRESS: 3xx3 - Activation		ADDRESS: 3xx4 - Activation	ADDRESS: 3xx5 - Activation
00	**The output is not used**		
Event No	**ZONE Event - Description**	**PARAMETERS 1**	**PARAMETERS 2**
01 ZONE OPEN	**Zone Open** Activated on "OR" function (if at least one of the set area numbers is open the PGM is activated) Deactivated on "AND" function (when all of the set area numbers are closed the PGM is restored)	Enter zone number "FROM"	Enter zone number "TO" *"00" – not used, operates only "FROM"*
02	Not used	-	-
03 ZONE BYPASS	**Zone Bypassing** Activated on "OR" function (if at least one of the set area numbers is bypassed the PGM is activated, with no sense of the way of bypassing) Deactivated on "AND" function (when all of the set area numbers are not bypassed the PGM is restored)	Enter zone number "FROM"	Enter zone number "TO" *"00" – not used, operates only "FROM"*
04-07	Not used	-	-
08 ZONE TAMPER	**Zone Tamper** Activated on "OR" function (if at least one of the set area numbers is with open tamper the PGM is activated) Deactivated on "AND" function (when all of the set area numbers are with closed tamper the PGM is restored)	Enter zone number "FROM"	Enter zone number "TO" *"00" – not used, operates only "FROM"*
09-11	Not used	-	-
12 ZONE IN ALARM	**Zone in Alarm** Activated on "OR" function (if at least one of the set area numbers is in alarm the PGM is activated) Deactivated on "AND" function (when all of the set area numbers are alarm restored the PGM is restored too)	Enter zone number "FROM"	Enter zone number "TO" *"00" – not used, operates only "FROM"*
13	Not used		
14 ZONE IN	**Zone in Fire Alarm** Activated on "OR" function (if at least one of	Enter zone number "FROM"	Enter zone number "TO" *"00" – not used, operates only*

FIRE	the set area numbers is in fire alarm the PGM is activated) Deactivated on "AND" function (when all of the set area numbers are fire alarm restored the PGM is restored too)		*"FROM"*
15	Not used		
16 **ZONE IN MEDICAL**	**Zone in Medical Alarm** Activated on "OR" function (if at least one of the set area numbers is in medical alarm the PGM is activated) Deactivated on "AND" function (when all of the set area numbers are medical alarm restored the PGM is restored too)	Enter zone number "FROM"	Enter zone number "TO" *"00" – not used, operates only "FROM"*
17-19	Not used	-	-
Event No	**AREA Event - Description**	**PARAMETERS 1**	**PARAMETERS 2**
20 **AREA ARM**	**Area Arming** Activated on "OR" function (if at least one of all area numbers is armed the PGM is activated) Deactivated on "AND" function (when all area numbers are disarmed the PGM is restored)	Enter the arming type*: 1 – FULL arming 2 – STAY arming 3 – SLEEP arming **All arming types are enabled by default.**	-
21*	**Area Disarming** Activated on "AND" function (when all area numbers are disarmed the PGM is activated) Deactivated on "OR" function (if at least one area number is armed the PGM is restored)		-
22-26	Not used	-	-
27 **ALARM IN AREA**	**Alarm in Area** Activated on "OR" function (if at least one area number is in alarm the PGM is activated) Deactivated on "AND" function (when all area numbers are alarm restored the PGM is restored too)	Enter the alarm type*: 1 – Burglary alarm 2 – Fire alarm 3 – Panic alarm 4 – Tamper alarm 5 – Medical alarm 6 – Ambush code **All alarm types are enabled by default.**	-
28*	**Alarm in Area – Restore** Activated on "AND" function (when all area numbers are alarm restored the PGM is activated) Deactivated on "OR" function (if at least one area number is in alarm the PGM is restored)	Enter the alarm type*: 1 – Burglary alarm 2 – Fire alarm 3 – Panic alarm 4 – Tamper alarm 5 – Medical alarm 6 – Ambush code **All alarm types are enabled by default.**	-
29 **PANIC IN AREA**	**Panic Alarm in Area** Activated on "OR" function (if at least one area number is in panic alarm the PGM is activated) Deactivated on "AND" function (when all area numbers are panic alarm restored the PGM is restored too)	Enter the panic type*: 1 – Silent panic 2 – Sound panic 3 – Silent medical 4 – Sound medical 5 – Fire **All panic types are enabled by default.**	
30*	**Panic Alarm in Area – Restore** Activate on "AND" function (when all area numbers are panic alarm restored the PGM is activated)	Enter the panic type*: 1 – Silent panic 2 – Sound panic 3 – Silent medical	

	Deactivated on “OR” function (if at least one area is in panic alarm the PGM is restored)	4 – Sound medical 5 – Fire **All panic types are enabled by default.**	
31-35	Not used	-	-
Event No	**CODE Events - Description**	**PARAMETERS 1**	**PARAMETERS 2**
36 VALID CODE ENTER	**Valid User Code Enter** Activated on “OR” function (when a valid user code is entered the PGM is activated) Deactivation on time - 5 sec.	Enter the number of user code to start “FROM”.	Enter the number of user code to end “TO”.
		To set a single user code, enter 00 at the address for PARAMETERS 2. *To set all possible user codes, enter 00 for both addresses PARAMETERS 1 and PARAMETERS 2.*	
37 AMBUSH CODE	**Ambush Code Enter** Activated on “OR” function (when an ambush code is entered the PGM is activated) Deactivation on time - 5 sec.	Enter the number of user code to start “FROM”.	Enter the number of user code to end “TO”.
38 BLOCK KBD	**Keyboard Block** Activated when 3 non valid user codes are entered in sequence. Deactivation on time - 5 sec.	-	-
39 VALID PROXY	**Proximity card using** *Only for those cases when the Areas associated to the PGM number are disarmed.* Activated on “OR” function (when a valid proximity card is placed in front of the card reader the PGM is activated) Deactivation on time - 5 sec.	Enter the number of proximity card to start “FROM”.	Enter the number of proximity card to end “TO”.
40 INVALID PROXY	**Non valid proximity card using** Deactivation on time - 5 sec.	-	-
41-46	Not used	-	-
Event No	**TROUBLE Event - Description**	**PARAMETERS 1**	**PARAMETERS 2**
47 SYSTEM FAULT	**System Trouble** Activated on “OR” function (if at least one system trouble is present the PGM is activated) Deactivated on “AND” function (when no system troubles are present)	Enter the trouble type*: 1 – AC power loss 2 – Battery loss 3 – Blown fuse 4 – Tel. line or communication failure 5 – Tamper 6 – System bus error 7 – Fire line failure 8 – Siren fault **All system troubles are enabled by default.**	
48*	**System Trouble - Restore** Activated on “AND” function (when all system troubles are restored) Deactivated on “OR” function (if at least one system trouble is present)	Enter the trouble type*: 1 – AC power loss 2 – Battery loss 3 – Blown fuse 4 – Tel. line or communication failure 5 – Tamper 6 – System bus error 7 – Fire line failure 8 – Siren fault **All system troubles are enabled by default.**	

49-54	Not used	-	-
Event No	**Special Events - Description**	**PARAMETERS 1**	**PARAMETERS 2**
55 **ENG. MENU ENTRY**	**Engineer menu entry** The PGM is activated in Engineer menu entry. The PGM is restored in Engineer menu exit.	-	-
56 - 58	Not used	-	-
59 **CHIME EVENT**	**"Chime" Sound Signal** Activated on "OR" function (there is "Chime" activated in at least one area) Deactivation on time - 5 sec.	-	-
60 **VIDEO ON ARMED**	**Video on armed** Activated in case of violation in an instant zone with "Video on armed" set option. Deactivation on time – 1 minute.	-	-
61 **FIRE RESET**	**Fire Detector Reset** The PGM is activated when the Memory log file is cleared after entering of valid codes with rights for operation in the respective area. Deactivation on time - 5 sec.	-	-
62 **TIME SLOT**	**Time slot activation** Follows the activation of the respective time slot number.	Enter a time slot number from 1 to 8.	-
63** 	**PGM Timer** This only deactivation event. After the set time is over the PGM is restored.	Enter time in interval 000-255 seconds/ minutes units.	
64 **CONTROL**	**Remote control** *Remote Arming and Disarming of the PGM output via communication module - AJAX, VD/DTMF, ARGUS and built-in digital communicator. Remote control via ProsTE software.*	-	-
65 **REMOTE ACCESS**	**Remote access** *Remote activation and deactivation (restore) of the PGM output.*	-	-
66 **ALARM OR ENTRY TIME** ECLIPSE 8	**Alarm or entry time**	-	-
67-72	Not used	-	-

** More than one parameter can be selected.*

****Note: The events are not available in revision number 1.80.**

A limited event numbers are available in ECLIPSE 8 control panel. The panel supports events numbers: 20, 21, 27, 37, 39, 47, 61, 64 and 66. Not that event number 66 is available only in ECLIPSE 8 control panel.

4. Areas

In “AREAS” menu, the engineer programs some parameters and settings for the areas in the system.
Some of the addresses are available for programming only with LCD keyboard!

Attention: In ECLIPSE 8 control panel is available only one area in the system - AREA 01.

ECLIPSE Control Panels Series – AREA capability:

Control panel	Available AREAS
ECLIPSE 8	1
ECLIPSE 32	8

Quick table for 4. AREAS Programming Menu

Address Number				Programming parameter	ECLIPSE 8	ECLIPSE 32
4	0	0	0	AREAS Account Length	✓	✓
4	0	0	1	AREAS Double Knock Time	✓	✓
4	0	0	2	Arm on no move	×	✓
4	0	0	3	AREA POSTPONE Time	×	✓
4	0	1	0	AREA 01 Exit time	✓	✓
4	0	1	1	AREA 01 Entry time	✓	✓
4	0	1	2	AREA 01 Bell Cycle	✓	✓
4	0	1	3	AREA 01 Account number	✓	✓
4	0	1	4	AREA 01 Attributes 1 (Bell options)	✓	✓
4	0	1	5	AREA 01 Attributes 2 (Arm/Disarm)	✓	✓
4	0	1	6	AREA 01 Panic types	×	✓
4	0	1	7	AREA 01 Name	×	✓
4	0	1	8	AREA 01 Bell Delay	×	✓
4	0	1	9	AREA 01 Time slot	×	✓
4	0	2	0	AREA 02 Exit time	×	✓
4	0	2	1	AREA 02 Entry time	×	✓
4	0	2	2	AREA 02 Bell Cycle	×	✓
4	0	2	3	AREA 02 Account number	×	✓
4	0	2	4	AREA 02 Attributes 1 (Bell options)	×	✓
4	0	2	5	AREA 02 Attributes 2 (Arm/Disarm)	×	✓
4	0	2	6	AREA 02 Panic types	×	✓
4	0	2	7	AREA 02 Name	×	✓
4	0	2	8	AREA 02 Bell Delay	×	✓
4	0	2	9	AREA 02 Time slot	×	✓
…						
4	0	8	0	AREA 08 Exit time	×	✓
4	0	8	1	AREA 08 Entry time	×	✓
4	0	8	2	AREA 08 Bell Cycle	×	✓
4	0	8	3	AREA 08 Account number	×	✓
4	0	8	4	AREA 08 Attributes 1 (Bell options)	×	✓
4	0	8	5	AREA 08 Attributes 2 (Arm/Disarm)	×	✓
4	0	8	6	AREA 08Panic types	×	✓
4	0	8	7	AREA 08 Name	×	✓
4	0	8	8	AREA 08 Bell Delay	×	✓
4	0	8	9	AREA 08 Time slot	×	✓

A ACCOUNT LENGTH

ADDRESS	4000
OPERATION	400
TEXT MENU	6. PARTITIONS – 1. ACCOUNT LENGTH

Setting the area account number digit length

An account number digit length is assigned at this address. The digit length can be 4 or 6-digit. Every pressing of a random button or arrows changed alternatively the parameter.

At this address for you set the parameter as:

4 digits	The area account number is 4-digit.
6 digits	The area account number is 6-digit.

When switching from 4- to 6-digits account numbers, the digits 00 will automatically be added at the end. For example, the 4-digits number 1234 will become 123400.

When changing over from 6- to 4-digits numbers, only the first four figures in the 4-digits number will remain valid. For example, the 6-digits number 123456 will become 1234. Due to risk of coincidence of account numbers, changing over from 6- to 4-digits numbers IS NOT RECOMMENDED!

Default setting: 4 digits

A DOUBLE KNOCK

ADDRESS	4001
OPERATION	401
TEXT MENU	6. PARTITIONS – 2. DOUBLE KNOCK

Setting the "Double knock" delay time for zones

The engineer assigns a time interval from 1 to 5-minute at this address. The time interval starts running when a detector in the zone is activated for the first time when the system is armed. An alarm event is registered if second detector activation is recorded within this interval in the same or another zone.
An alarm event will also be registered if no zone is restored within 15 seconds of the first activation of the zone.

Default setting: 3 minutes

ARM ON NO MOVE

ADDRESS	4002
OPERATION	402
TEXT MENU	6. PARTITIONS – 3. NO MOV ALARM

ECLIPSE 32

Setting a time for automatic arming of the area on no moving activity in the zones

The Engineer sets a time for automatic arming of the area when there is no moving activity in all associated to that area zones. The time is common for all areas in the system. The automated arming is enabled on the respective area address 4xx5 (option 5), where "xx" is the area number from 1 to 8.
Enter a time from 001 to 255 minutes. The set 000 value disables the automatic arming of the area.

Pay attention that the automatic arming will start if there is a set time at the address and after all zones in the respective area are closed. Check also the set options at address 4xx5 (option 5 is enabled) for the respective area.

Default setting: [000]

POSTPONE AA

ADDRESS	4003
OPERATION	403
TEXT MENU	6. PARTITIONS – 4. POSTPONE TIME

ECLIPSE 32

Automatic arming delay from Manager

Enter a time from 001 to 255 minutes.
The Engineer sets a time for automatic arming delay on time slot from Manager. During of a running automatic arming procedure on set time slot, (address 4xx9, where “xx” is the area number) entering of Manager code will call several addition options on the display. Choosing the “POSTPONE” option will delay the automatic arming with the set time at this address, as the set time must be greater than 10 minutes.

☞ *If at the time of arming, the area is not ready to be armed, the automatic arming procedure will be delayed until the area is ready to be armed, and will be armed in the next 1 minute.*

Default setting: [010]

AREA 1 EXIT

ADDRESS	4010
OPERATION	410 + 01
TEXT MENU	6. PARTITIONS – 5. AREAS – 1. AREA – 01. EXIT TIME

Setting of exit time for Area 1

Exit time is assigned to Entry/Exit type zones associated to Area 1. A 3-digit number between 000 and 255 seconds is entered. For an interval of time, less than 10 seconds, the first two digits must be 0.

☞ *In case of command for arming of two or more areas, with a common Entry/Exit type zone then every area will be armed only when its own set exit time is over. The common zone will be bypassed in the already armed areas until and the last one area is armed. For example, the Zone 01 is associated to all areas in the system, and when the seven of them are armed the Zone 01 will be bypassed until and the last area 8 is armed too.*

Default setting: 045 seconds

AREA 1 ENTRY

ADDRESS	4011
OPERATION	411 + 01
TEXT MENU	6. PARTITIONS – 5. AREAS – 1. AREA – 02. ENTRY TIME

Setting of entry time for Area 1

Entry time is assigned to Entry/Exit type zones associated to Area 1. A 3-digit number between 000 and 255 seconds is entered. For an interval of time, less than 10 seconds, the first two digits must be 0.

☞ *When during running of entry time after opening of Entry/ Exit type zone associated to more than one area in the system, a valid user code associated to at least one of those areas is entered, then the common area will be disarmed and the other areas will stay armed. The common Entry/ Exit type zone will be bypassed in the left armed areas.*
When one of the armed areas is in alarm mode and a valid code associated to other area is entered (but both areas have a common zone) the siren stops (if it is associated to the same area) and the alarm cycle continues as set. Then an alarm message is sent to the monitoring station, and the event is recorded in the LOG file. An alarm event is generated when the entry time is over regardless that the violated zone is restored or not.

Default setting: 015 seconds

AREA 1 CYCLE

ADDRESS	4012
OPERATION	412 + 01
TEXT MENU	6. PARTITIONS – 5. AREAS – 1. AREA – 03. ALARM CYCLE

Setting of alarm cycle (bell time) for Area 1

Duration of the alarm cycle is set for the programmable siren type outputs associated to Area 1.

A 3-digit number between 000 and 255 minutes is assigned at the address. For an interval of time, less than 10 minutes, the first two digits must be 0.

Entering of valid user code ends the alarm cycle and restores the siren type outputs.

Default setting: 003 minutes

AREA 1 CYCLE

ADDRESS	4013
OPERATION	413 + 01
TEXT MENU	6. PARTITIONS – 5. AREAS – 1. AREA – 04. ACCOUNT

Programming of number for communication with monitoring station for Area 1

The engineer enters 4 or 6-digit symbols according to the settings of ADDRESS 4000. The valid symbols include digits from 0 to 9 and letters from A to F. For letters entry the engineer uses the following button combinations:

Letter	Button combination
A	+ 0
B	+ 1
C	+ 2
D	+ 3
E	+ 4
F	+ 5

Default setting: 4 symbols (FFFF)

AREA 1 ATTR 1

ADDRESS	4014
OPERATION	414 + 01
TEXT MENU	6. PARTITIONS – 5. AREAS – 1. AREA – 05. BELL OPTIONS

Programming of Bell attributes for Area 1

The Bell attributes for Area 1 are programmed at this address. Every attribute is activated with pressing of a digit button with a respective number (from 1 to 5).
Next pressing of the same button number will deactivate the attribute. At end of the procedure, at the keyboard's display must be active only the numbers of the assigned attributes.

More than one attribute can be assigned at this address.

Pay attention that for attribute "5. Fire alarm duration" both of the attribute statuses are used – see the description of the attribute in the table below. The attribute numbers 3 and 4 are available only for ECLIPSE 32 control panel.

At this address you set the following attributes:

1	Squawk on ARM	Sound signalization in arming: **∗** – The sound signalization in arming is disabled. **1** - The sound signalization in arming is enabled. The siren will activate singly for 1 second when arming the Area 1.

2	Squawk on Disarm	Sound signalization in disarming: ∗ – The sound signalization in disarming is disabled. **2** - The sound signalization in disarming is enabled. The siren will activate twice for 1 second when disarming the Area 1.
3	Ring Back Squawk	Sound signalization for memory log record: ∗ – The sound signalization for memory log record is disabled. **3** - The sound signalization for memory log record is enabled. The siren will activate 4 times for 1 second in disarming the Area 1 if there was an alarm event in the Area.
4	10 minutes Warning	10 minutes warning signal before automatic arming on time slot: ∗ – The 10 minutes warning signal is disabled. **4** – The 10 minutes warning signal is enabled. The siren will activate 3 times for 1 second 10 minutes before the start of automatic arming on time slot.
5	Fire Alarm Duration	FIRE Alarm duration. This attribute is applicable for Fire type zones or sending of Fire alarm via keyboard button's combination. Programming this attribute affects the performance of the programmable SIREN output. ∗ - Until the Bell time at address 4012 ends. **5** - Until a valid user or manager code is entered.

Default setting: 5. Fire Alarm Duration

AREA 1 ATTR 2

ADDRESS	4015
OPERATION	415 + 01
TEXT MENU	6. PARTITIONS – 5. AREAS – 1. AREA – 06. ON/OFF OPTIONS

Programming of ON/OFF attributes for Area 1

The ON/OFF (ARM/ DISARM) attributes for Area 1 are programmed at this address. Every attribute is activated with pressing of a digit button with a respective number (from 1 to 5).
Next pressing of the same button number will deactivate the attribute. At end of the procedure, at the keyboard's display must be active only the numbers of the assigned attributes.
More than one attribute can be assigned at this address.

Pay attention that both of the attribute statuses are used – see their description in the table below. The attribute numbers 1, 2 and 5 are available only for ECLIPSE 32 control panel.

At this address you set the following attributes:

1	Auto disarming on Time Slot	Automatic disarming on time slot: ∗ – Not used. **1** – The Area 1 is disarmed according the set time slot number at ADDRESS 4019.
2	Auto ARM type – Full, Stay	Setting the arming type on time slot: ∗ – Full Arming mode. The type of automatic arming is Full ARM. **2** Stay Arming mode. The type of automatic arming is Stay ARM.
3	Clear Bypass on Disarm	Clear the bypassed zones on disarm: ∗ – The bypassed zones are not cleared on disarm. **3** – The bypassed zones are cleared on disarm.
4	Quick ARM	Quick arming with one button: ∗ – Not used. The user has to enter valid code for arming. **4** – The quick arming is enabled. To arm an area the user has to hold the arming button for 2-3 seconds.
5	Auto ARM on no movement	Automatic arming when there is no movement in the zones associated to Area 1:

		∗ – Not used. **5** – The automatic arming on no movement in the zones is enabled. Area 1 will be automatically armed after ending the time set at ADDRESS 4002 when there is no movement in the zones associated to the Area 1.

Default setting: 4. Quick ARM

AREA 1 PANICS

ADDRESS	4016
OPERATION	416 + 01
TEXT MENU	6. PARTITIONS – 5. AREAS – 1. AREA – 07. PANICS

Setting of Panic types for Area 1

The setting for panic events concerns only the alarm signals sent via the keyboard quick panic buttons. The keyboard must be associated to Area 1 for sending the panic alarm messages. The quick button combinations for panics are: 1+3 for police alarm, 4+6 for medical alarm, and 7+9 for fire alarm. To send an alarm signal just press and hold together the button combination for at least 2-3 seconds.

Two types of panic alarm can be set:

Silent panic *(panics 2. Silent police and 4. Silent medical are set at this address) – only the programmable Panic types outputs and the digital communicator are activated. There is no indication for memory event. After entering of valid user code, the MEMORY LED lights on together with the number of the activated zone.*

Audible panic *(panics "1. Police", "3. Medical" and "5. Fire alarm" are set at this address) – the programmable Siren and Panic outputs and the digital communicator are activated. The sirens are activated immediately with no time delay.*

More than one panic can be assigned at this address.

At this address for you set the following attributes:

1	Panic Police	Audible Panic police alarm: ∗ – Not used. The panic is disabled. **1** – The audible panic is enabled. The user can send Panic police alarm message with pressing and holding the buttons 1+3 for 2-3 seconds.
2	Panic Police Silent	Silent Panic police alarm: ∗ – Not used. The panic is disabled. **2** – The silent panic is enabled. The user can send Panic police alarm message with pressing and holding the buttons 1+3 for 2-3 seconds.
3	Panic Medical	Audible Panic medical alarm: ∗ – Not used. The panic is disabled. **3** – The audible panic is enabled. The user can send Panic medical alarm message with pressing and holding the buttons 4+6 for 2-3 seconds.
4	Panic Medical Silent	Silent Panic medical alarm: ∗ – Not used. The panic is disabled. **4** – The silent panic is enabled. The user can send Panic medical alarm message with pressing and holding the buttons 4+6 for 2-3 seconds.
5	Fire Panic	Audible Panic fire alarm: ∗ – Not used. The panic is disabled. **5** – The audible panic is enabled. The user can send Panic fire alarm message with pressing and holding the buttons 7+9 for 2-3 seconds.

To select all panic alarms press button "0" – the button alternatively switches over all enabled / all disabled state.

Default setting: All disabled

The following special cases are possible when a keyboard is used for sending of panic alarms:
1. In case of several panics are sent at the same time just the last one will be displayed.
2. When there are 3 keyboards in the system and the configuration is: the 1st keyboard is associated to Area 1, the 2nd keyboard is associated to Area 2, and the 3rd keyboard is associated to both Areas 1 and 2, then in case of panics sent the keyboards 1 and 2 will display the panics only in their own areas, and the 3rd keyboard will display the both panics. In case the panic is sent from the 3rd keyboard then the other two keyboards will display the panic alarm.

AREA 1 NAME

ADDRESS	4017
OPERATION	417 + 01
TEXT MENU	6. PARTITIONS – 5. AREAS – 1. AREA – 08. NAME

ECLIPSE 32

LCD

Programming of the Area 1 Name
The engineer can enter a new name for Area 1 at this address. The name has to be up 16 symbols – letters (small and capital), digits and special symbols, including spaces.
The letters can be entered directly by the digit buttons. The cursor moves automatically to the right after choosing of letter or digit, or may be moved manually by the arrows. To enter a digit, press the respective button and hold it for 2-3 seconds. See also item 2.8. Entering text for LCD Keyboard.
Confirm the new area name with ENTER button.

Default setting: AREA 1

AREA 1 BDELAY

ADDRESS	4018
OPERATION	418 + 01
TEXT MENU	6. PARTITIONS – 5. AREAS – 1. AREA – 09. BELL DELAY

ECLIPSE 32

Programming of bell delay for Area 1
The engineer assigns at the address a bell delay for activation of the programmable Siren type outputs after a burglary alarm event is registered in any arming mode.
The set time delay of this address is considered when the activated zone is not a Fire type and the option “Bell delay” is enabled in Zone Attributes 2 (at address 2xx5, where “xx” is a zone number).
The bell delay time is set in interval from 000 to 255 seconds.

Default setting: 000 seconds

AREA 1 TSLOT

ADDRESS	4019
OPERATION	419 + 01
TEXT MENU	6. PARTITIONS – 5. AREAS – 1. AREA – 10. TIMESLOT

ECLIPSE 32

Programming of time slot for Area 1
An Area 1 timeslot is set.
The valid timeslot numbers are from 1 to 8. If the selected access code is not to be restricted by a timeslot, enter 0.
Use the digit buttons to enter the timeslot number. The entered number is confirmed with ENTER.
For programming of timeslots, see for details Menu. 5 Timeslot Programming.

Pay attention that when you set time slot number at this address, the Area arming is automatic for the time slot duration. If at the time slot start time there are open zones in the area the control panel will wait for zones’ restoration (to be ready for arming) and after that will perform automated arming on the set time slot.

If you program the time slot number at the address and there are less than 10 minutes to its start time (set at address 5xx0) the area will not be automatically armed at this time. The automatic arming of the area on the set time slot will perform 24 hours later.

Default setting: 0

The Area numbers from 02 to 08 are programmed analogically at the respective addresses.

5. Timeslots

The "TIMESLOTS" menu is available only for ECLIPSE 32 control panel.

The term Time Slot is used to represent a set of functions related to time intervals. A time slot is used to automate operations fixed in time, which are periodically repeated by the security system. Such operations can be: managing programmable input (e.g. managing door access); turning on lights; automatic arming or disarming security; restricting user code access; automatic setting up of temporary passage routes in secured site.

ECLIPSE 32 can organize time slots to help solve tasks related to automation of periodically recurring operations. 8 time slots can be organized according the system configuration. The engineer sets start and end time of the time slot, days and holidays included, etc. The programming of holidays and nonworking days is organized at additional addresses, as for every month four separate addresses are provided.

Quick table for 5.TIMESLOTS Programming Menu

Address Number				Programming parameter	ECLIPSE 32
5	0	1	0	Timeslot 1 Start	✓
5	0	1	1	Timeslot 1 End	✓
5	0	1	2	Timeslot 1 Days	✓
5	0	1	3	Timeslot 1 Options	✓
5	0	2	0	Timeslot 2 Start	✓
5	0	2	1	Timeslot 2 End	✓
5	0	2	2	Timeslot 2 Days	✓
5	0	2	3	Timeslot 2 Options	✓
…					
5	0	8	0	Timeslot 8 Start	✓
5	0	8	1	Timeslot 8 End	✓
5	0	8	2	Timeslot 8 Days	✓
5	0	8	3	Timeslot 8 Options	✓
5	4	1	1	January: 1 – 8 dates	✓
5	4	1	2	January: 9 – 16 dates	✓
5	4	1	3	January: 17 – 24 dates	✓
5	4	1	4	January: 25 – 31 dates	✓
5	4	2	x	February: dates	✓
…					
5	4	3	x	March: dates	✓
…					
5	4	4	x	April: dates	✓
…					
5	4	5	x	May: dates	✓
…					
5	4	6	x	June: dates	✓
…					
5	4	7	x	July: dates	✓
…					
5	4	8	x	August: dates	✓
…					
5	4	9	x	September: dates	✓
…					
5	5	0	x	October: dates	✓
…					
5	5	1	x	November: dates	✓
…					
5	5	2	x	December: dates	✓

T1 START

ADDRESS	5010
OPERATION	510 + 01
TEXT MENU	7. SCHEDULES – 1. TIMESLOTS – 1. TIMESLOT – 1. START

ECLIPSE 32

Start time for arming on Timeslot 1

The start time of Timeslot 1 is set at this address. The start time must be less than the stop time set at address 5011. The engineer sets the start time in format [HH:MM].

Default setting: [00:00]

T1 END

ADDRESS	5011
OPERATION	511 + 01
TEXT MENU	7. SCHEDULES – 1. TIMESLOTS – 1. TIMESLOT – 2.END

ECLIPSE 32

End time for disarming on Timeslot 1

The stop time of Timeslot 1 is set at this address. The stop time must be greater than the start time set at address 5010. The engineer sets the start time in format [HH:MM].

If a user code has been set a timeslot from 8:30 to 17:00h, the respective user can use his code within that specified time. From 17:00 to 0:00h and from 0:00 to 8:30h the respective code will remain inactive.

Default setting: [00:00]

T1 DAYS

ADDRESS	5012
OPERATION	512 + 01
TEXT MENU	7. SCHEDULES – 1. TIMESLOTS – 1. TIMESLOT – 3.WEEK DAYS

ECLIPSE 32

Setting of week days for operation on Timeslot 1

The days of the week during which the timeslot 1 is to be used are set at this address.
The days of the week are selected with the digits buttons from 1 to 7. The selected days are presented with a digit on the display or lighting on LED number – see the table below for correspondence:

Button	Week day
1	Monday
2	Tuesday
3	Wednesday
4	Thursday
5	Friday
6	Saturday
7	Sunday

For example, if only Wednesday is set for the timeslot, the user code will only be valid on Wednesday from 8:30 to 17:00h.

Default setting: none

T1 OPTIONS

ADDRESS	5013
OPERATION	513 + 01
TEXT MENU	7. SCHEDULES – 1. TIMESLOTS – 1. TIMESLOT – 4.OPTIONS

ECLIPSE 32

Setting of holidays for operation on Timeslot 1

The engineer sets at this address those holidays included in the Timeslot 1 operation. When this option is enabled (1 is selected) for Timeslot 1, the system will also notes the settings at addresses 5411 – 5524, where the engineer sets the holidays and officially nonworking days for every month in the year.

Default setting: none

The addresses of Time slots from 2 to 8 are programmed in an analogical way.

The settings of holidays and officially nonworking days are programmed at individual addresses, as for every month four separate addresses are provided. The holidays and nonworking days are common for all Timeslot numbers. All months are programmed analogically on different addresses – see the quick reference table at the beginning of this section.

JAN 1-8
JAN 9-16
JAN 17-24
JAN 35-31

ADDRESS	5411; 5412; 5413; 5414
OPERATION	541 + 01; 542 + 01; 543 + 01; 544 + 01
TEXT MENU	7. SCHEDULES – 2. CALENDAR – 01. JANUARY

ECLIPSE 32

Setting of holidays and nonworking days for January

The address 5411 presents 8 different fields for the first eight days of January. Every field is editable when the cursor is under it. The cursor can be moved with the arrows. In the square parentheses on the right side of the screen, the engineer can see the editable date. To set a date as holiday move the cursor under it and press button “0”. The selected holidays for the month are presented with “H” capital letter. Pressing the button “0” once again will return the previous status.

Indication:
LCD: The workdays are displayed with “-” symbol. The holidays are displayed with “H” symbol.
LED: The zone numbers corresponding to the days set for holidays are lighting on.

In the text menu structure the holidays and nonworking days are set after entry in 01. JANUARY submenu. The holidays are selected with pressing button “1” – see also the description for operation with text structure in item 1. GENERAL INFORMATION and APPENDIX D.
The other days of January are set on the following address in an analogical way.

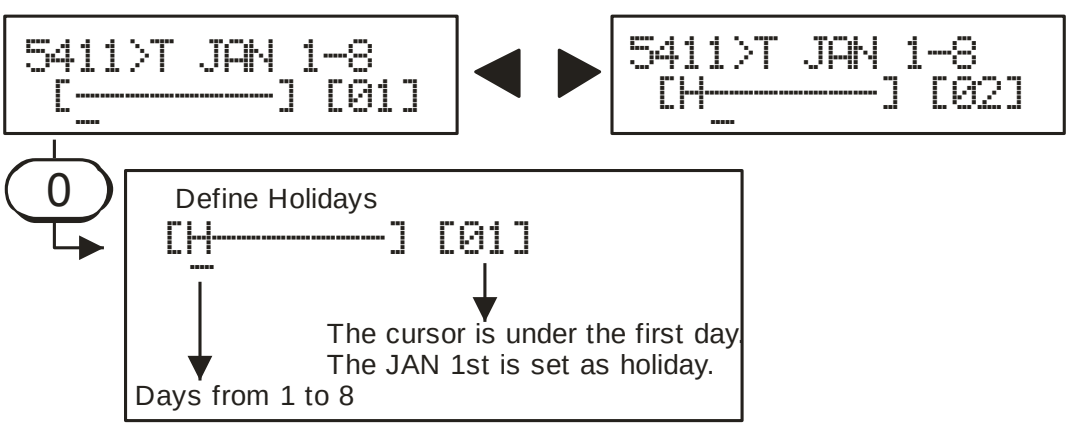

Default setting: none

6. Communicator

The menus for communicator programming are accessible only from the Engineer of the system (engineer code 7777 by default).

ECLIPSE Control Panels Series – dialer capability:

Control panel	Telephone numbers	Protocols	Remote progr.
ECLIPSE 8	2	SIA, CID	×
ECLIPSE 32	4	SIA, CID	✓

Quick table for 6. COMMUNICATOR Programming Menu

Address Number				Programming parameter	ECLIPSE 8	ECLIPSE 32
6	0	0	0	PSTN Options	✓	✓
6	0	0	1	Attempts	✓	✓
6	0	0	2	Test Period	✓	✓
6	0	0	3	Test Hour	✓	✓
6	0	0	4	TLM delay	✓	✓
6	0	1	0	Telephone 1 Number	✓	✓
6	0	1	1	Telephone 1 Protocol	✓	✓
6	0	1	2	Telephone 1 Messages	✓	✓
6	0	1	3	Telephone 1 Areas	×	✓
6	0	2	0	Telephone 2 Number	✓	✓
6	0	2	1	Telephone 2 Protocol	✓	✓
6	0	2	2	Telephone 2 Messages	✓	✓
6	0	2	3	Telephone 2 Areas	×	✓
6	0	3	0	Telephone 3 Number	×	✓
6	0	3	1	Telephone 3 Protocol	×	✓
6	0	3	2	Telephone 3 Messages	×	✓
6	0	3	3	Telephone 3 Areas	×	✓
6	0	4	0	Telephone 4 Number	×	✓
6	0	4	1	Telephone 4 Protocol	×	✓
6	0	4	2	Telephone 4 Messages	×	✓
6	0	4	3	Telephone 4 Areas	×	✓
6	9	0	0	UDL Telephone number	×	✓
6	9	0	1	PC ID	×	✓
6	9	0	2	Panel ID	×	✓
6	9	0	3	Ajax ID	×	✓
6	9	0	4	UDL Options	×	✓
6	9	0	5	Rings	×	✓

ATTENTION: Due to differences in PSTNs provided in different countries and territories, Teletek Electronics cannot provide unconditional assurance of successful operations on every PSTN network termination point. This may be subject to changes made to the communication facilities or procedures of each individual telephone service provider.

Additionally, Teletek Electronics' alarm equipment is designed to work with traditional telephone line. Please, bear in mind that the use of alarm panels over alternative telephone systems like VoIP (Voice over Internet Protocol) may not be as effective as with traditional telephone line.

If you are experiencing problems with the use of a Teletek Electronics device over PSTN, please contact us for further assistance.

6.1 General Parameters

At ADDRESSES 60xx are programmed common parameters of the connected to the system communication devices.

PSTN OPTIONS

ADDRESS	6000
OPERATION	600
TEXT MENU	8. COMMUNICATION – 1. PSTN – 1. OPTIONS

Setting of options for the built-in digital communicator
The options are common for programmed telephone numbers.
Use the digit buttons to set the option numbers. Every pressing of the button changes alternatively the option status.

Pay attention that for some options both of the statuses are used – see the description of the options in the table below. The option number 3 is not available for ECLIPSE 8 control panel.

At this address you set the following option:

1	Dialer Enable / Disable	Option for using of the digital communicator: Dialer Disable (✱) – The digital communicator is disabled (not used). Dialer Enable (1) – The digital communicator is enabled.
2	TLM Enable / Disable	Enabling of Telephone Line Monitoring (TLM): TLM Disable (✱) – The TLM is disabled. TLM Enable (2) – The TLM is enabled.
3	TLM ALARM Enable / Disable	Enabling of alarm message to monitoring station in case of telephone line failure: TL ALARM Disable (✱) – No alarm messages to monitoring station. TL ALARM Enable (3) – Sending of alarm messages to monitoring station.
4	Tone / Pulse	Option for the type of dialing: TONE (✱) – Tone type dialing. PULSE (4) – Pulse type dialing.
5	Dial Tone / Blind dialing	Enabling of “Wait dial tone” signal check: DIAL TONE (✱) – The “Wait dial tone” signal check is enabled. BLIND DIALING (5) – The “Wait dial tone” signal check is disabled. The “Blind dialing” is enabled.
6	ALL / Alternative	Option for setting the algorithm of sending alarm messages: ALL (✱) – Message report from one telephone number, which is also duplicated at all the other programmed telephone numbers. ALTERNATIVE (6) – Message report from at least one of the two telephone numbers. ***Note:*** If the alarm events are assigned to different telephone numbers, the setting of this option does not matter. In that case independent message report to different telephone numbers is realized - “SPLIT Report”.
7 8	REPORT CHANNELS	**Channels for sending messages** The options 7 and 8 are set in combination to define the used report channel:

7	8	Channel
✱	✱	No communication through AJAX and PSTN channels
✱	8	AJAX is the main channel, and PSTN is backup channel
7	✱	PSTN is the main channel, and AJAX is backup channel
7	8	Both channels are used

The REPORT CHANNELS options 7 and 8 are available in software revision 1.8 and higher of the ECLIPSE Series control panels.

Default setting: 5. Blind Dialing, 7, 8

ATTEMPTS

ADDRESS	6001
OPERATION	601
TEXT MENU	8. COMMUNICATION – 1. PSTN – 2. ATTEMPTS

Number of attempts for communication with monitoring station

The Engineer sets the number of attempts to connect to the central station for telephone monitoring and the number of repetitions of voice messages at the address. Use the digit numbers to enter a value from 1 to 9. The value “0” disables the operation and the communicator will not dial a number.

The value assigned at this address is the number of attempts to be made for each of the telephones, configured at addresses 6010, 6020, 6030 and 6040.
If the assigned value is 4 and there are two telephone numbers set at addresses 6010 and 6020, the number of attempts that will be made are 8 – by 4 attempts for each telephone number.

After the assigned number of attempts for communication is reached, the attempts to transmit voice messages will be terminated. The attempts to transmit will be renewed to the central station first, when
the next transmission event occurs.

Default setting: 4 attempts

TEST PERIOD

ADDRESS	6002
OPERATION	602
TEXT MENU	8. COMMUNICATION – 1. PSTN – 3. TEST MESSAGES – 2. PERIOD

Test message period

Duration of transmission of test message in hours (HHH) from 000 to 255 is entered.
Three digits must be entered. When entering a period shorter than 10 hours the first two digits must be 0.

Default setting: 024 hours

TEST HOUR

ADDRESS	6003
OPERATION	603
TEXT MENU	8. COMMUNICATION – 1. PSTN – 3. TEST MESSAGES – 1. TIME

Test message hour

At this address is set the first hour, at which the test message will start to be transmitted to central monitoring station. Hours and minutes are entered (HH:MM), as the entered time is the time of starting
the first test.
The next test time will start after the assigned at ADDRESS 6002 test period.

Default setting: [00:05]

TLM DELAY

ADDRESS	6004
OPERATION	604
TEXT MENU	8. COMMUNICATION – 1. PSTN – 4. FAULT DELAY

Telephone line monitor fault delay
A delay of 000 to 255 minutes is set prior to indication of a telephone line failure. Three digits must be entered. When entering a period shorter than 10 hours the first two digits must be 0.

Default setting: [000] minutes

PH1 NUMBER

ADDRESS	6010
OPERATION	610 +01
TEXT MENU	8. COMMUNICATION – 1. PSTN – 5. PHONES – 1. PHONE – 1. PHONE NUMBER

Setting of Telephone 1 for the digital communicator

A Telephone 1 number is assigned for communicating with central station. The telephone number must not exceed 32 characters. Some special functions can be entered by using the next button combinations:
1. Buttons + 0 - Switches on "pulse dialer". “P” letter is displayed on the screen.
2. Buttons + 1 - Switches on "tone dialer". “T” letter is displayed on the screen.
3. Buttons + 2 - 2 seconds pause. “D” letter is displayed on the screen.
4. Buttons + 3 - Switches on "Wait dial tone". “✱” symbol is displayed on the screen.
5. Buttons + 4 - "Blind dialing"; Switches off "Wait dial tone". “#” symbol is displayed on the screen.
6. Buttons + 5 - Deletes the entered telephone number.

Dialing has been assigned a default tone signal and "Wait dial tone" function is switched on.
The entered telephone number and the special functions can be saved with pressing the ENTER button.

Default setting: none

PH1 PROTOCOL

ADDRESS	6011
OPERATION	611 + 01
TEXT MENU	8. COMMUNICATION – 1. PSTN – 5. PHONES – 1. PHONE – 2. PROTOCOL

Setting the communication protocol for Telephone 1

The engineer sets the communication protocol type for Telephone 1 at the address. The supported communication protocols are CID and SIA.
Every pressing of random key switches alternatively between the two protocols. Confirm you choice with ENTER button.

Default setting: CID

PH1 MESSAGES

ADDRESS	6012
OPERATION	612 + 01
TEXT MENU	8. COMMUNICATION – 1. PSTN – 5. PHONES – 1. PHONE – 3. MESSAGES TYPE

Setting of alarm messages for Telephone 1

At this address are assigned the one or more type of the messages which will be transmitted to a central monitoring station in case of alarm condition through Telephone 1.

To the Telephone 1 can be programmed to be transmitted only chosen messages. In case the user wants some messages to be transmitted and through telephone number 2 (3, 4 or all), then the same chosen messages have to be assigned and at ADDRESS 6022 (6032, 6042). If it does not matter through which of the telephone numbers the messages are sent, you have to leave the ADDRESS 6022 (6032,6042) with its default programming (No messages are assigned).

The digit buttons 1 to 8 are used for programming. Pressing them each time will alternatively change the status of the respective message type - report (active status of the parameter) or no report (inactive status of the parameter). At the end of the procedure only those parameters, which correspond to the designated for report messages, should remain activated on the display.

The following messages are assigned:

1	ALARM	Message is sent in case of events: - ALARM - ALARM Restore
2	TAMPER	Message is sent in case of events: - TAMPER - TAMPER Restore
3	PANIC, AMBUSH CODE	Message is sent in case of events: - PANIC - Entered AMBUSH CODE
4	FIRE	Message is sent in case of events: - FIRE - FIRE Restore
5	ARM, DISARM, BYPASS	Message is sent in case of events: - ARMING - DISARMING - ZONE BYPASS
6	MEDICAL	Message is sent in case of events: - MEDICAL ALARM - MEDICAL ALARM Restore
7	TROUBLE	Message is sent in case of events: - TROUBLE - TROUBLE Restore
8	SPECIAL	Message is sent in case of events: - Engineer menu entry - Engineer menu exit - Power supply lost for zone - Panic alarm from keyboard - “Chime” signalization - Write to LOG in Arming mode - PGM Timer - Remote control - Remote access - Alarm or entry time

Default setting: All messages enabled

PH1 AREAS

ADDRESS	6013
OPERATION	613 + 01
TEXT MENU	8. COMMUNICATION – 1. PSTN – 5. PHONES – 1. PHONE – 4. ATTACH

ECLIPSE 32

Associating of areas to Telephone 1
According the system configuration the engineer associates one or several AREA numbers for operation with Telephone 1. To select an AREA press the digit button corresponding to its number. The next pressing of the same button will deselect the AREA.

To select all areas press button “0” – the button alternatively switches over all enabled / all disabled state.

The Telephone 1 will be inactive if there are no associated areas to it!

Default setting: AREA 1

Telephone numbers from 2 to 4 are programmed in an analogical way.

6.2 Remote programming

The parameters for up / download programming of the integrated digital communicator are set on ADDRESSES 69xx. The remote control parameters are available only for ECLIPSE 32 control panel.

UDL TELEPHONE

ADDRESS	6900
OPERATION	690
TEXT MENU	8. COMMUNICATION – 1. PSTN – 6. UDL – 1. PHONE

ECLIPSE 32

Setting a telephone number for remote control

A Telephone number for remote control via ProsTE software is assigned at the address.

The set telephone number for remote programming is active only when option 1. CALL BACK is enabled at ADDRESS 6904!

The telephone number must not exceed 32 characters. Some special functions can be entered by using the next button combinations:
1. Buttons ⌂ + 0 - Switches on "pulse dialer". “P” letter is displayed on the screen.
2. Buttons ⌂ + 1 - Switches on "tone dialer". “T” letter is displayed on the screen.
3. Buttons ⌂ + 2 - 2 seconds pause. “D” letter is displayed on the screen.
4. Buttons ⌂ + 3 - Switches on "Wait dial tone". “*” symbol is displayed on the screen.
5. Buttons ⌂ + 4 - "Blind dialing"; Switches off "Wait dial tone". “#” symbol is displayed on the screen.
6. Buttons ⌂ + 5 - Deletes the entered telephone number.

Dialing has been assigned a default tone signal and "Wait dial tone" function is switched on.
The entered telephone number and the special functions can be saved with pressing the ENTER button.

Default setting: none

PC ID

ADDRESS	6901
OPERATION	691
TEXT MENU	8. COMMUNICATION – 1. PSTN – 6. UDL – 2. PC ID

ECLIPSE 32

Personal computer identification number for up/ down loading.

The PC ID number for up / down loading is configured at this address. Four digits can be introduced. Valid are symbols 0 to 9. The entered number is saved with pressing the ENTER button.

Default setting: 1234

PANEL ID

ADDRESS	6902
OPERATION	692
TEXT MENU	8. COMMUNICATION – 1. PSTN – 6. UDL – 3. PANEL ID

ECLIPSE 32

Control panel identification number

The control panel up/down loading ID number is entered at this address. Four digits can be introduced. Valid are symbols 0 to 9. The entered number is saved with pressing the ENTER button.

Default setting: 1234

AJAX ID

ADDRESS	6903
OPERATION	693
TEXT MENU	8. COMMUNICATION – 1. PSTN – 6. UDL – 4. AJAX ID

ECLIPSE 32

Identification number for communication AJAX module.

The AJAX communication module number for serial connection to ECLIPSE 32 control panel is configured at this address. Four digits can be introduced. Valid are symbols 0 to 9. The entered number is saved with pressing the ENTER button.

Default setting: 4007

UDL OPTIONS

ADDRESS	6904
OPERATION	694
TEXT MENU	8. COMMUNICATION – 1. PSTN – 6. UDL – 5. OPTIONS

ECLIPSE 32

Options for remote control

The following options are assigned:

1	CALL BACK	Enabling of “Call Back” option. CALL BACK Disable (✱) – The option is disabled. In case of incoming request for remote control, the panel will answer and start the procedure for remote control. CALL BACK Enable (1) – The option is enabled. In case of incoming request for remote control from PC, the control panel will reject the answer and will dial back the telephone number set at address 6900, and after that starts the procedure for remote control.
2	ANSWERING MACHINE	Enabling of “Answering machine” option. ANSWERING MACHINE Disable (✱) – The option is disabled. The connection between the control panel and the telephone line is direct. ANSWERING MACHINE Enable (2) – The option is enabled. Priority should be given to any automatic answering devices (like FAX or telephone answering machines), if such are connected to the telephone line. The Answering Machine function should be enabled in such cases. During initial income of a series of calls (rings), the ECLIPSE 32 temporizes the maximum number of rings, set at Address 6905. The automatic answering machine must be adjusted to a fewer number of rings. If within 4 minutes there is another series of incoming calls the ECLIPSE 32 shall answer the first one.

Default setting: none

RINGS

ADDRESS	6905
OPERATION	695
TEXT MENU	8. COMMUNICATION – 1. PSTN – 6. UDL – 6. RINGS

ECLIPSE 32

Setting the number of incoming rings.

The symbols 0 to 9 are used.

RINGS Up/ down loading is disabled if 0 is entered.

It is recommended this parameter does not exceed the value of 7!

Default setting: 4

8. Peripheral Devices

At ADDRESSES 8xxx are programmed the parameters and options for all enrolled devices to the control panel.
The first enrolled device at ADDRESS 8010 is always the main PCB and this cannot be changed. It is recommended the second enrolled device at address 8020 to be a LCD keyboard for programming and settings.

The steps for enrolling of new devices to the control panel are listed in item“5. Enrolling of new devices”.

ECLIPSE Control Panels Series – DEVICE capability:

Control panel	Max. supported devices	Keyboards	Proxi readers	Exp.modules
ECLIPSE 8	2	✓	✓	×
ECLIPSE 32	31	✓	✓	✓

Quick table for 8. Device Programming Menu

Address Number				Programming parameter	ECLIPSE 8	ECLIPSE 32
8	0	1	0	Device 01 ID [Main]	✓	✓
8	0	1	1	Device 01 Areas [Main]	×	✓
8	0	1	3	Device 01 Inputs/ Outputs [Main]	×	✓
8	0	2	0	Device 02 ID	✓	✓
8	0	2	1	Device 02 Areas	×	✓
8	0	2	2	Device 02 Options	×	✓
8	0	2	3	Device 02 Inputs/ Outputs	×	✓
8	0	2	4	Device 02 Communication	×	✓
8	0	3	0	Device 03 ID	✓	✓
8	0	3	1	Device 03 Areas	×	✓
8	0	3	2	Device 03 Options	×	✓
8	0	3	3	Device 03 Inputs/ Outputs	×	✓
8	0	3	4	Device 03 Communication	×	✓
8	0	4	0	Device 04 ID	×	✓
8	0	4	1	Device 04 Areas	×	✓
8	0	4	2	Device 04 Options	×	✓
8	0	4	3	Device 04 Inputs/ Outputs	×	✓
8	0	4	4	Device 04 Communication	×	✓
…						
8	3	2	0	Device 32 ID	×	✓
8	3	2	1	Device 32 Areas	×	✓
8	3	2	2	Device 32 Options	×	✓
8	3	2	3	Device 32 Inputs/ Outputs	×	✓
8	3	2	4	Device 32 Communication	×	✓

DEV 01 ID

ADDRESS	8010
OPERATION	810 + 01
TEXT MENU	9. DEVICES – 01. DEVICE [MAIN] – 1. ID

Identification number for Device 01.

The Device 01 is always the control panel, and it is performed at the LCD display with it is unique name [MAIN] and ID number and with a number 1 on the LED display. 1.

This address is only for review.

```
8010>DEV1_ID
[MAIN][XXXXXX]
```

Name and ID number of the DEVICE 01

[MAIN][XXXXXX]

Special ID number unique for every device.

System Name

Default setting: MAIN

DEV 01 AREAS

ADDRESS	8011
OPERATION	811 + 01
TEXT MENU	9. DEVICES – 01. DEVICE [MAIN] – 2.AREAS

ECLIPSE 32

Association of Areas to Device 01

According the system configuration the engineer associates one or several AREA numbers for operation with Device 01. To select an AREA press the digit button corresponding to its number. The next pressing of the same button will deselect the AREA.

To select all areas press button "0" – the button alternatively switches over all enabled / all disabled state.

Default setting: AREA 1

DEV 01 AREAS

ADDRESS	8013
OPERATION	813 + 01
TEXT MENU	9. DEVICES – 01. DEVICE [MAIN] – 4. RESOURCES

ECLIPSE 32

Hardware resources of Device 01.

At this address, the engineer can check the hardware resources (number of available zone inputs and PGM outputs) for Device 01. This address is only for review.

Default setting: In[8] Out[5]

DEV 02 ID

ADDRESS	8020
OPERATION	810 + 02
TEXT MENU	9. DEVICES – 02. DEVICE [Name] – 1. ID

Identification number for Device 02.

This is an address for enrolling Device 02 to the control panel. It is recommended that to be a LCD programming keyboard. The following list represents the type of devices available to enroll to the system configuration:

Indication LED	Indication LCD	Description	ECLIPSE 8*	ECLIPSE 32**
2	LED	Keyboard LED 16/ 32	✓	✓
3	LCD	Keyboard LCD 32/ 32S	✓	✓
4	ZEXP	Zone expander	×	✓
5	PEXP	PGM expander	×	✓
6	Proxi	Proximity card reader	✓	✓
7	WEXP	Wireless expander	×	✓
8	LED8	Keyboard LED 8	✓	✓

* ***Eclipse 8:*** *Up to 2 devices can be enrolled to the system bus: 2 keyboards, 2 proxi readers or 1 keyboard and 1 proxi reader.*
** ***Eclipse 32:*** *Up to 31 devices can be enrolled to the system bus irrespective of their type.*
NOTE: *It is not necessary to enroll the built-in proximity reader in keyboards LED 32, LCD 32 and LCD 32S.*

The steps for enrolling devices to the control panel are described in item 5. Enrolling new devices. You can also enter the unique ID number of the device directly with the digit buttons and letters:

Digit	Button
0	0
1	1
2	2
3	3
4	4
5	5
6	6
7	7
8	8
9	9

Letter	Button Combination
A	+ 0
B	+ 1
C	+ 2
D	+ 3
E	+ 4
F	+ 5

To delete the device from the address press and hold the button “0” for 2-3 seconds.

Default setting: LCD/ LED according to the type of enrolled keyboard

DEV 02 AREAS

ADDRESS	8021
OPERATION	811 + 02
TEXT MENU	9. DEVICES – 01. DEVICE [MAIN] – 2.AREAS

ECLIPSE 32

Association of Areas to Device 02
According the system configuration the engineer associates one or several AREA numbers for operation with Device 02. To select an AREA press the digit button corresponding to its number. The next pressing of the same button will deselect the AREA.

To select all areas press button "0" – the button alternatively switches over all enabled / all disabled state.

If all areas for a device are disabled the device becomes inactive, irrespective there are any options programmed for it. If the device is a keyboard then it can perform only engineer and maintenance programming, and the manager and user programming are disabled as and the arming and disarming operations with it.

Default setting: AREA 1

DEV 02 OPTIONS

ADDRESS	8022
OPERATION	812 + 02
TEXT MENU	9. DEVICES – 02. DEVICE [Name] – 3. OPTIONS

ECLIPSE 32

Setting of options for Device 02
A set of options are programmed at the address for Device 02. The options are selected with pressing the respective digit button. The next pressing the same button deselects the option. More than one option can be programmed. The final choice is confirmed with ENTER.

The described below options can be programmed only for the connected to the system bus keyboards irrespective of their type. The options must be programmed for every keyboard separately at the respective address.
ADDRESSES 8xx2 for options programming are not available for device types MAIN, ZEXP, PEXP, WEXP or PROX. ADDRESSES 8xx2 are available for programming only for LED and LCD keyboards.

The following options are assigned:

1	CHIME	Enabling of sound signalization "Chime" for Device 02. CHIME Disable (✱) – The "Chime" is disabled. CHIME Enable (1) – The "Chime" is enabled. The "Chime" sound signal is activated in opening of entry-exit type zone. ***Note:*** *The "Chime" sound signalization must be enabled and for respective zone at address 2xx5, option 6. Chime, where "xx" is the zone number.*
2	ZONE INFORMATION	Hiding the zone information for Device 02, when the system is disarmed. ZONE INFORMATION Display (✱) – Every opening of a zone is displayed on the display with information for the zone number. For LED keyboards – the number of the zone is blinking. ZONE INFORMATION Hide (2) – The zone information is hidden. No information is displayed on the displayed of Device 02.
3	CONFIDENTIAL MODE*	Confidential mode entry for Device 02. The Confidential mode is a special mode, where the system information of the main screen is locked and cannot be viewed from the user. CONFIDENTIAL MODE Disable (✱) – The option is disabled. The main screen shows information for the system status. CONFIDENTIAL MODE Enable (3) – the option is enabled. When the programmed at address 0014 time is over the information for the current system status will be locked for viewing. The message "Confidential" is displayed on the LCD keyboards, and there is no indication on the LED keyboards.

		***Attention**: The exit of the confidential mode is performed with pressing of a random button or entering of valid code (user, manager or engineer), according that 4. EXIT CONFIDENTIAL MODE option is disabled or enabled.*
4	EXIT CONFIDENTIAL MODE*	Confidential mode exit. The option defines the way of exit confidential mode. EXIT CONFIDENTIAL MODE (✱) – The option is disabled. The exit from confidential mode is with pressing a random button. EXIT CONFIDENTIAL MODE (4) – The option is enabled. The exit from confidential mode is with entering of valid code. ***Attention:** When the option 3. CONFIDENTIAL MODE is disabled the setting of option 4. EXIT CONFIDENTIAL MODE does not matter.*

** When the option is enabled, the keyboard will enter in confidential mode irrespective of the current system status (Armed or Disarmed). The confidential mode is inactive when the system is in programming mode (user, manager or engineer).*

Default setting: 2. Zone Information Enable

DEV 02 I/O

ADDRESS	8023
OPERATION	813 + 02
TEXT MENU	9. DEVICES – 02. DEVICE [NAME] – 4. RECOURSES

ECLIPSE 32

Hardware resources of Device 02.
At this address, the engineer can check the on board resources (number of available zone inputs and PGM outputs) for Device 02. This address is only for review.

Default setting: according the type of the device

DEV 02 COMM

ADDRESS	8024
OPERATION	814 + 02
TEXT MENU	9. DEVICES – 02. DEVICE [NAME] – 5. COMM QUALITY

ECLIPSE 32 LCD

Communication quality for Device 02.
The engineer can check the quality of communication between the Device 02 and the control panel). This address is only for review. The communication quality is described with signal strength, the number of sent packets and the number of repeated packets.

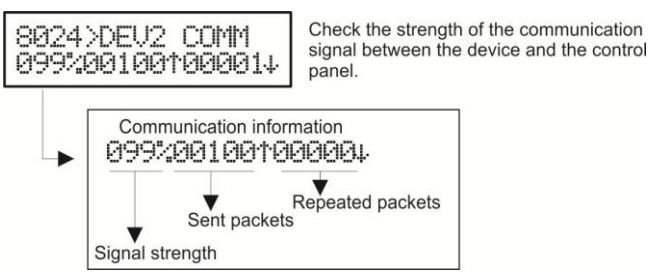

When there is no enrolled device to the address 8xx0, a message “No device!” is displayed at address 8xx4, where “xx” is the device number.

Default setting: N.A.

The Device numbers 03 to 31 are programmed analogically on the respective addresses.

APPENDIX

A. Structure of zone inputs on the ECLIPSE 32 control panel

"aa" to "hh" – A zone number from 09 to 32

Physical inputs	**Z1**		**Z2**		**Z3**		**Z4**			**Z8**	
Logical inputs in doubling mode	1	9	2	10	3	11	4	12	…	8	16
Zone number	01	aa	02	bb	03	cc	04	dd		08	hh
ADDRESS	2010	2aa0	2020	2bb0	2030	2cc0	2040	2dd0		2080	2hh0
Description	[1] [1]	[01] [09]	[1] [2]	[01] [10]	[1] [3]	[01] [11]	[1] [4]	[01] [12]		[1] [8]	[01] [16]

	Fixed positions
	Programmed positions. **For the respective zone is necessary to attach a number of device and logical input!**

B. Memory LOG Events

Event number	LED Indication	Description	System Event (LOG)	Zone/ User	CID Code	SIA Code
1	①②③④⑤⑥⑦❽	Burglary Alarm event	Z## Alarm	Zone No/ name	1 13A	BA
2	①②③④⑤⑥❼⑧	Burglary Alarm event restore	Z## Alarm R	Zone No/ name	3 13A	BH
3	①②③④⑤⑥❼❽	Fire Alarm event	Z## Fire	Zone No/ name	1 11A	FA
4	①②③④⑤❻⑦⑧	Fire Alarm event restore	Z## Fire R	Zone No/ name	3 11A	FH
5	①②③④⑤❻⑦❽	Panic Alarm event	Z## Panic	Zone No/ name	1 12A	PA
6	①②③④⑤❻❼⑧	Panic Alarm event restore	Z## Panic R	Zone No/ name	3 12A	PR
7	①②③④⑤❻❼❽	Tamper Alarm event	Z## Tamper	Zone No/ name	1 137	TA
8	①②③④❺⑥⑦⑧	Tamper Alarm event restore	Z## Tamper R	Zone No/ name	3 137	TR
9	①②③④❺⑥⑦❽	Medical Alarm event	Z## Medical	Zone No/ name	1 1AA	MA
10	①②③④❺⑥❼⑧	Medical Alarm event restore	Z## Medical R	Zone No/ name	3 1AA	MR
11	①②③④❺⑥❼❽	Activated zone with „24h Burglary" AUX attribute	Z## 24h Alarm	Zone No/ name	1 13A	BA
12	①②③④❺❻⑦⑧	Restored zone with „24h Burglary" AUX attribute	Z## 24h Alarm R	Zone No/ name	3 13A	BH
13	①②③④❺❻⑦❽	Activated zone with AUX „Battery Low" attribute	Z## Batt Low	Zone No	1 3A2	YT
14	①②③④❺❻❼⑧	Restored zone with AUX „Battery Low" attribute	Z## Batt Restore	Zone No	3 3A2	YR
15	①②③④❺❻❼❽	Activated zone with AUX „GAS Detector" attribute	Z## Gas	Zone No	1 151	GA
16	①②③❹⑤⑥⑦⑧	Restored zone with AUX „GAS Detector" attribute	Z## Gas R	Zone No	3 151	GR
17	①②③❹⑤⑥⑦❽	Activated zone with AUX „Water leakage" attribute	Z## Water leak	Zone No	1 154	WA
18	①②③❹⑤⑥❼⑧	Restored zone with AUX „Water leakage" attribute	Z## Water leak R	Zone No	3 154	WR
19	①②③❹⑤⑥❼❽	Activated zone with AUX „AC Loss" attribute	Z## AC Loss	Zone No	1 3A1	AT
20	①②③❹⑤❻⑦⑧	Restored zone with AUX „AC Loss" attribute	Z## AC Restore	Zone No	3 3A1	AR
21	①②③❹⑤❻⑦❽	Activated zone with AUX „GSM Link Trouble" attribute	Z## GSM Link	Zone No	1 354	YS
22	①②③❹⑤❻❼⑧	Restored zone with AUX „GSM	Z## GSM Link R	Zone No	3 354	YK

		Link Trouble" attribute				
23	①②③❹⑤❻❼❽	Activated zone with AUX „Loss of heat" attribute	Z## Heat Loss	Zone No	1 153	ZA
24	①②③❹❺⑥⑦⑧	Restored zone with AUX „Loss of heat" attribute	Z## Heat Loss R	Zone No	3 153	ZR
25	①②③❹❺⑥⑦❽	Activated zone with AUX „GAS Trouble" attribute	Z## Gas Trbl	Zone No	1 157	GT
26	①②③❹❺⑥❼⑧	Restored zone with AUX „GAS Trouble" attribute	Z## Gas Trbl R	Zone No	3 157	GR
27	①②③❹❺⑥❼❽	Activated zone with AUX „High temperature" attribute	Z## High Temp	Zone No	1 158	KA
28	①②③❹❺❻⑦⑧	Restored zone with AUX „High temperature" attribute	Z## High Temp R	Zone No	3 158	KR
29	①②③❹❺❻⑦❽	Activated zone with AUX „Low temp" attribute	Z## Low Temp	Zone No	1 159	ZA
30	①②③❹❺❻❼⑧	Restored zone with AUX „Low temp" attribute	Z## Low Temp R	Zone No	3 159	ZR
31	①②③❹❺❻❼❽	Activated zone with „Write to LOG"(1) attribute	Z## Open	Zone No	-	-
32	①②❸④⑤⑥⑦⑧	Restored zone with "Write to LOG"(1) attribute	Z## Close	Zone No	-	-
33	①②❸④⑤⑥⑦❽	Zone Bypass	Z## Bypassed	Zone No/ name	1 57A	UB
34	①②❸④⑤⑥❼⑧	Zone Bypass restore	Z## UnBypassed	Zone No/ name	3 57A	UU
35	①②❸④⑤⑥❼❽	Quick arming – FULL ARM	QuickArm A#	Area No/ name	3 4A8	CL
36	①②❸④⑤❻⑦⑧	Quick arming – STAY ARM	QuickArm A#Stay	Area No/ name	3 4A8	CL
37	①②❸④⑤❻⑦❽	Quick arming – SLEEP ARM	QuickArm A#Inst	Area No/ name	3 4A8	CL
38	①②❸④⑤❻❼⑧	Arming with user code - FULL	U##Arm A#	User/Area No	3 4A1	CL
39	①②❸④⑤❻❼❽	Arming with user code - STAY	U##Arm A#Stay	User No/ name	3 4A1	CL
40	①②❸④❺⑥⑦⑧	Arming with user code - SLEEP	U##Arm A#Inst	User No/ name	3 4A1	CL
41	①②❸④❺⑥⑦❽	Disarming with user code	U##Disarm A#	User/Area No	1 4A1	OP
42	①②❸④❺⑥❼⑧	Remote arming - FULL	U##RemArm A#	User/Area No	3 4A7	CQ
43	①②❸④❺⑥❼❽	Remote arming - STAY	U##RemArm A#Stay	User No/ name	3 4A7	CQ
44	①②❸④❺❻⑦⑧	Remote arming - SLEEP	U##RemArm A#Inst	User No/ name	3 4A7	CQ
45	①②❸④❺❻⑦❽	Remote disarming	U##RemDisarm A#	User/Area No	1 4A7	OQ
46	①②❸④❺❻❼⑧	Arming with keyswitch - FULL	Z##KeyArm A#	Zone/Area No	3 4A9	CS
47	①②❸④❺❻❼❽	Arming with keyswitch - STAY	Z##KeyArm A#Stay	Zone No/ name	3 4A9	CS
48	①②❸❹⑤⑥⑦⑧	Arming with keyswitch - SLEEP	Z##KeyArm A#Inst	Zone No/ name	3 4A9	CS
49	①②❸❹⑤⑥⑦❽	Disarming with keyswitch	Z##KeyDisarm A#	Zone/Area No	1 4A9	OS
50	①②❸❹⑤⑥❼⑧	FULL Arming on TimeSlot	AutoArm A#	Area No	3 4A3	CA
51	①②❸❹⑤⑥❼❽	STAY Arming on TimeSlot	AutoArm A#Stay	Area No	3 4A3	CA
52	①②❸❹⑤❻⑦⑧	Disarming on TimeSlot	AutoDisarm A#	Area No	1 4A3	OA
53	①②❸❹⑤❻⑦❽	FULL Arming on “no movement”	AutoArm A#	Area No	3 4A3	CA
54	①②❸❹⑤❻❼⑧	STAY Arming on “no movement”	AutoArm A#Stay	Area No	3 4A3	CA
55	①②❸❹⑤❻❼❽	Bypass of zone with FORCE attribute when arming	Z## Forced	Zone No/ name	1 57A	UB
56	①②❸❹❺⑥⑦⑧	Debypass of zone with FORCE attribute when disarming	Z## Included	Zone No/ name	3 57A	UU
57	①②❸❹❺⑥⑦❽	Arm Delay on Timeslot	U## ArmExtend A#	User/Area No	1 464	CE
58	①②❸❹❺⑥❼⑧	Ambush code entered	U## Duress Alarm	User No/ name	1 121	HA
59	①②❸❹❺⑥❼❽	Medical panic alarm sent from keyboard	KBD## Medical	Keyboard No	1 1AA	MA
60	①②❸❹❺❻⑦⑧	Medical panic alarm from keyboard restored	KBD## Medical R	Keyboard No	3 1AA	MR
61	①②❸❹❺❻⑦❽	Police panic alarm sent from keyboard	KBD## Panic	Keyboard No	1 12A	PA

62	①②❸❹❺❻❼⑧	Police panic alarm from keyboard restored	KBD## Panic R	Keyboard No	3 12A	PR
63	①②❸❹❺❻❼❽	Fire panic alarm sent from keyboard	KBD## Fire	Keyboard No	1 11A	FA
64	①❷③④⑤⑥⑦⑧	From panic alarm from keyboard restored	KBD## Fire R	Keyboard No	3 11A	FH
65	①❷③④⑤⑥⑦❽	Keyboard blocking	KBD## Lockout	Keyboard No	1 421	JA
66	①❷③④⑤⑥❼⑧	Entry in Engineer programming menu	Installer In	-	1 627	LB
67	①❷③④⑤⑥❼❽	Exit from Engineer programming menu	Installer Out	-	1 628	LX
68	①❷③④⑤❻⑦⑧	Entry in Remote programming mode	Download Start	-	1 411	RB
69	①❷③④⑤❻⑦❽	Exit from Remote programming mode	Download End	-	1 412	RS
70	①❷③④⑤❻❼⑧	Periodical test	Periodic Tst Rep	-	1 6A2	TX
71	①❷③④⑤❻❼❽	Manual test	Manual Tst Rep	-	1 6A1	TX
72	①❷③④❺⑥⑦⑧	No AC mains power supply	AC Failure	-	1 3A1	AT
73	①❷③④❺⑥⑦❽	Mains power supply restore	AC Restore	-	3 3A1	AR
74	①❷③④❺⑥❼⑧	Battery low charge	Battery Low	-	1 3A2	YT
75	①❷③④❺⑥❼❽	Battery loss	Battery Wlissing	-	1 311	YM
76	①❷③④❺❻⑦⑧	Battery restore	Battery Restore	-	3 3A9	YR
77	①❷③④❺❻⑦❽	Siren output short-circuit	Bell Short	-	1 321	YA
78	①❷③④❺❻❼⑧	Siren line broke out	Bell Absent	-	1 321	YA
79	①❷③④❺❻❼❽	Siren restored	Bell Restore	-	3 321	YH
80	①❷③❹⑤⑥⑦⑧	2-wire fire line fault (PGM1)	Fire line Flt	-	1 373	FT
81	①❷③❹⑤⑥⑦❽	2-wire fire line fault restored (PGM1)	Fire line Rstr	-	3 373	FJ
82	①❷③❹⑤⑥❼⑧	Fuse blown out	Fuse Blow	-	1 3AA	YP
83	①❷③❹⑤⑥❼❽	Fuse restore	Fuse Restore	-	3 3AA	YQ
84	①❷③❹⑤❻⑦⑧	Telephone line loss	TLM trouble	-	1 351	LT
85	①❷③❹⑤❻⑦❽	Telephone line restore	TLM restore	-	3 351	LR
86	①❷③❹⑤❻❼⑧	System power up	Power UP	-	1 3A8	RR
87	①❷③❹⑤❻❼❽	System reset	Reset	-	1 3A5	YW
88	①❷③❹❺⑥⑦⑧	Time change	Time Changed	-	3 625	JT
89	①❷③❹❺⑥⑦❽	Communication error for report to monitoring station	Report Error	-	1 354	YC
90	①❷③❹❺⑥❼⑧	Report to monitoring station restore	Report Restore	-	3 354	YK
91	①❷③❹❺⑥❼❽	Periphery device loss	D## Absent	Device No/ name	1 333	ET
92	①❷③❹❺❻⑦⑧	Periphery device restore	D## Restore	Device No/ name	3 333	ER
93	①❷③❹❺❻⑦❽	Tamper form periphery device	D## Tamper	Device No/ name	1 145	TA
94	①❷③❹❺❻❼⑧	Tamper form periphery device restore	D## Tamper R	Device No/ name	3 145	TR

(1) – The events are not sent to the monitoring software.

C. FIRE DELAY Operation Algorithm (ADDRESS 2015)

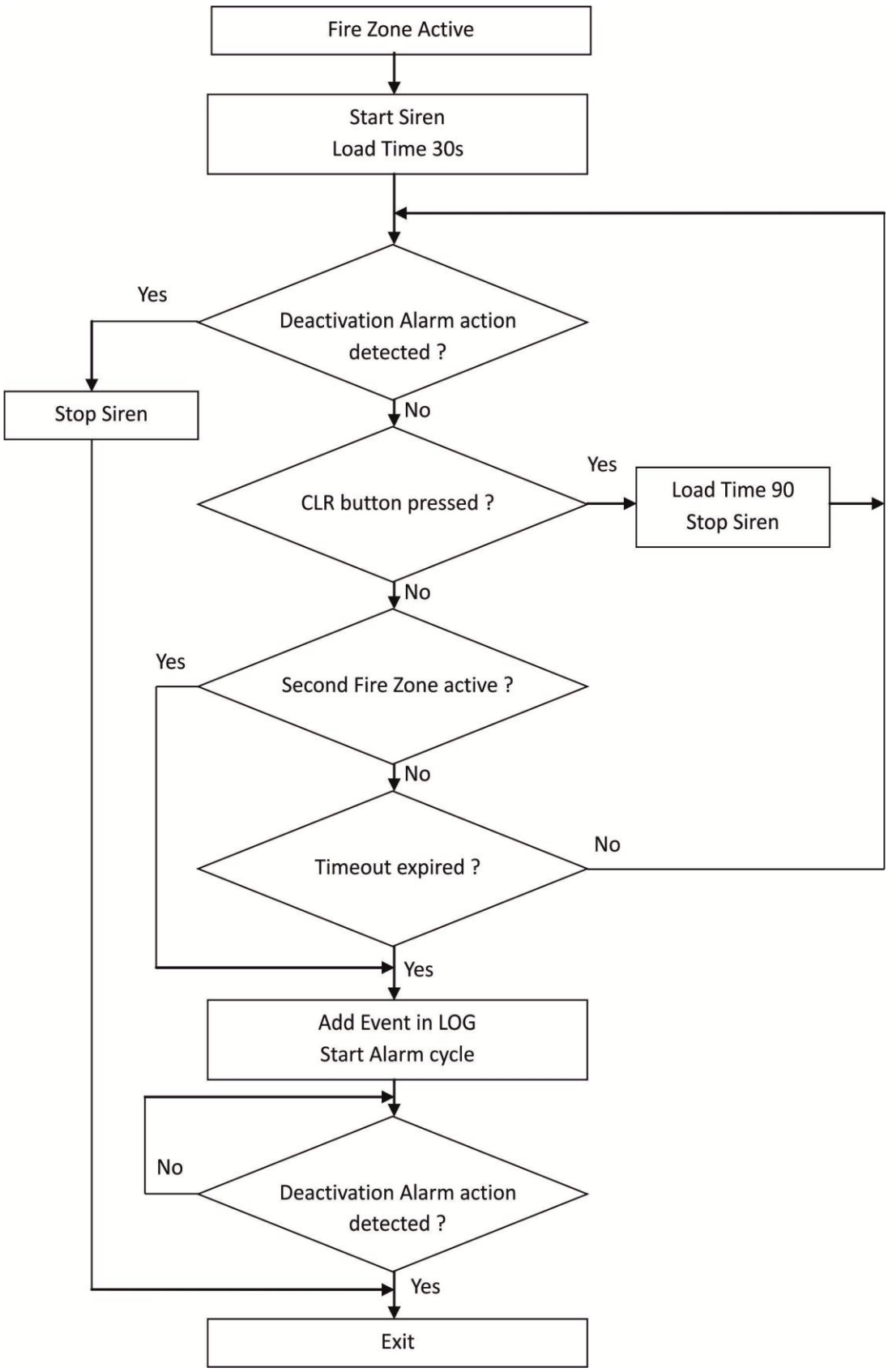

D. Text Tree-Structure Menus

There are several ways for setting parameters in text menus – that depends on the menu:

- **When the submenu allows choosing only one option** or attribute, or parameter from a list, the installer scrolls down to the desired one and confirms his choice with ✓ button. The set option is displayed with a “check” mark in front of it. The exit of the submenu is automatic. See Example 1.

- **When the submenu allows choosing of several options** or attributes, or parameters at the same time then the installer has to scroll down to each one and to enable it with pressing the 1 button. The set option is displayed with a “check” mark in front of it. The installer has to move to the next option using the arrow buttons and so on. To disable an option scroll down to it and press 0 button – the “check” mark will be deleted. When all the desired options are selected, the choice is confirmed with ✓ button. See Example 2.

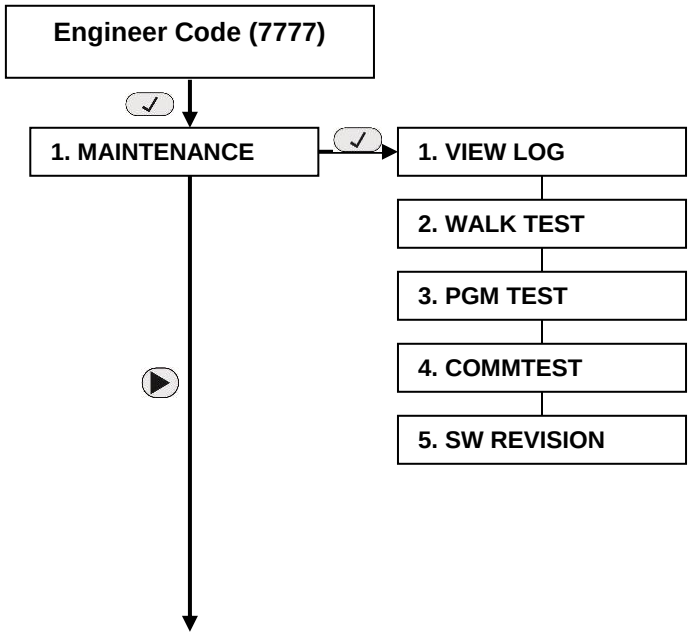

To the **2. SETTINGS** Menus

The text menus are available only in operation with LCD keyboard!

Some of the text menus are not available in ECLIPSE 8 Control panel – reference to the detailed descriptions in item 7!

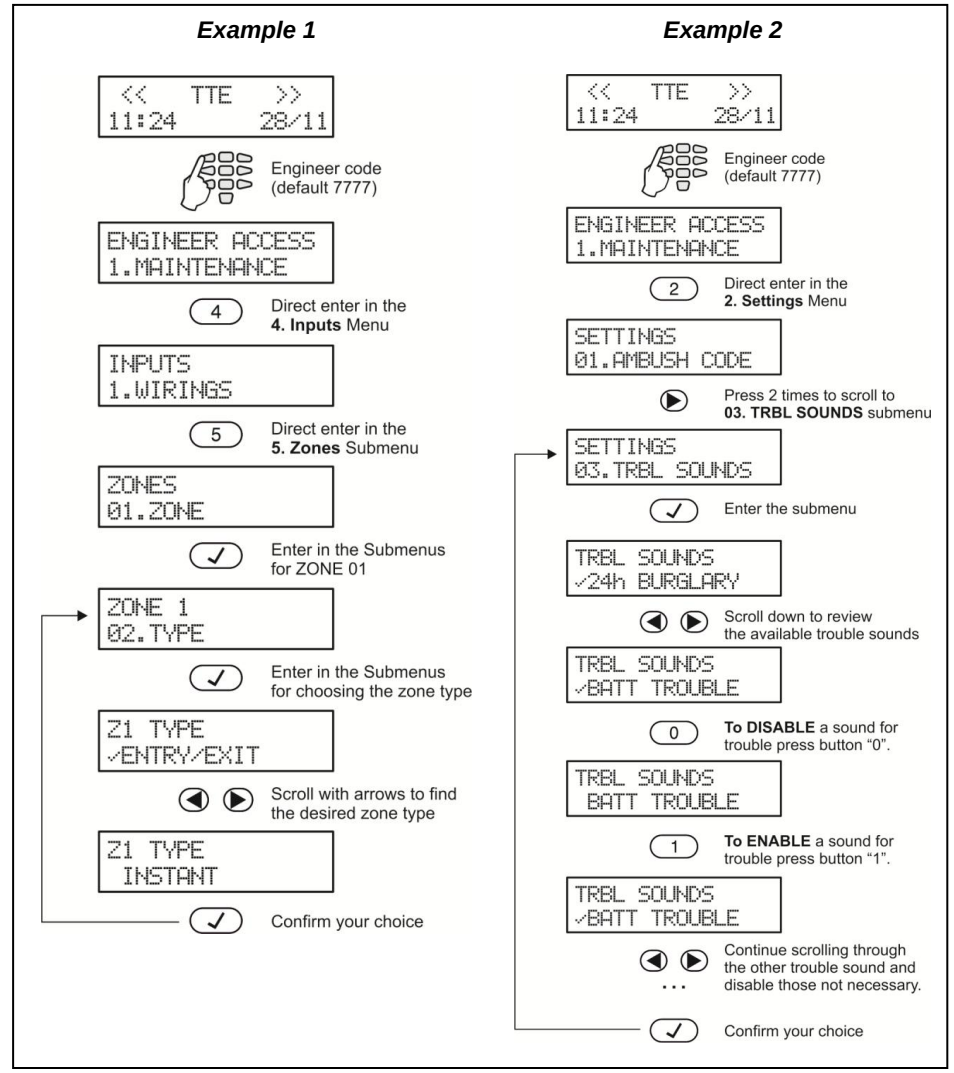

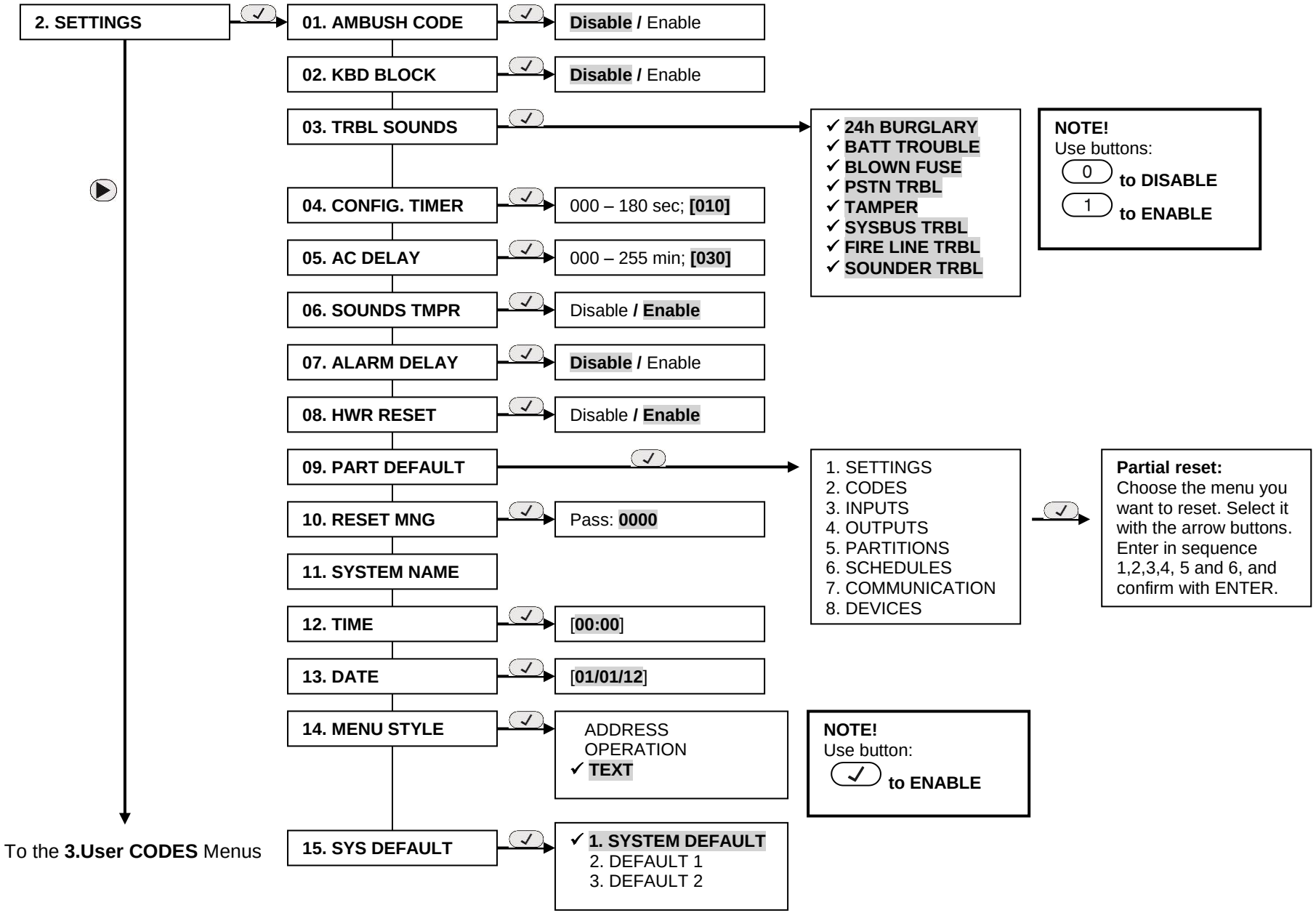
2. SETTINGS
01. AMBUSH CODE
Disable / Enable
02. KBD BLOCK
Disable / Enable
03. TRBL SOUNDS
✓ 24h BURGLARY
✓ BATT TROUBLE
✓ BLOWN FUSE
✓ PSTN TRBL
✓ TAMPER
✓ SYSBUS TRBL
✓ FIRE LINE TRBL
✓ SOUNDER TRBL
NOTE!
Use buttons:
0 to DISABLE
1 to ENABLE
04. CONFIG. TIMER
000 – 180 sec; [010]
05. AC DELAY
000 – 255 min; [030]
06. SOUNDS TMPR
Disable / Enable
07. ALARM DELAY
Disable / Enable
08. HWR RESET
Disable / Enable
09. PART DEFAULT
1. SETTINGS
2. CODES
3. INPUTS
4. OUTPUTS
5. PARTITIONS
6. SCHEDULES
7. COMMUNICATION
8. DEVICES
Partial reset:
Choose the menu you want to reset. Select it with the arrow buttons. Enter in sequence 1,2,3,4, 5 and 6, and confirm with ENTER.
10. RESET MNG
Pass: 0000
11. SYSTEM NAME
12. TIME
[00:00]
13. DATE
[01/01/12]
14. MENU STYLE
ADDRESS
OPERATION
✓ TEXT
NOTE!
Use button:
to ENABLE
15. SYS DEFAULT
✓ 1. SYSTEM DEFAULT
2. DEFAULT 1
3. DEFAULT 2
To the 3.User CODES Menus

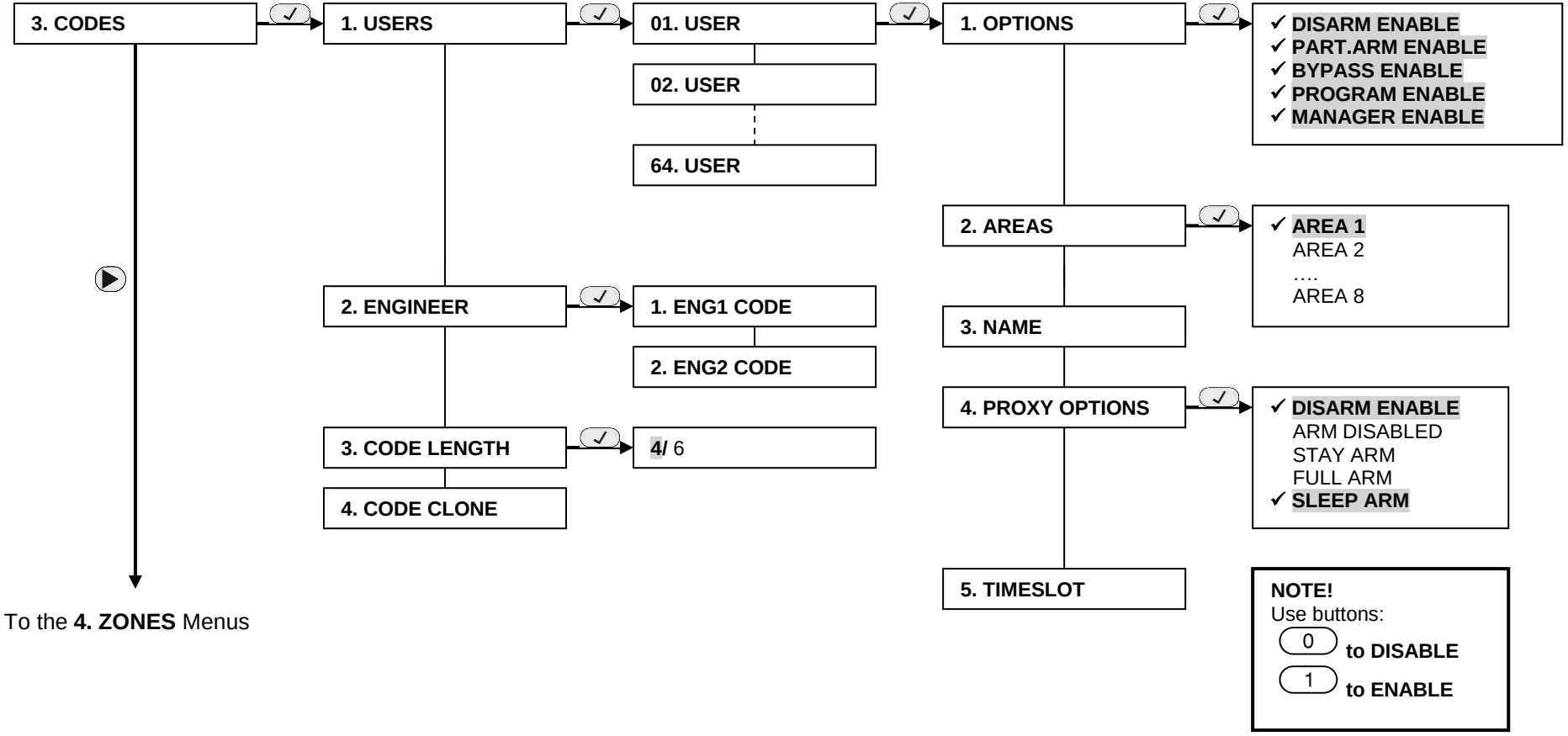

To the **4. ZONES** Menus

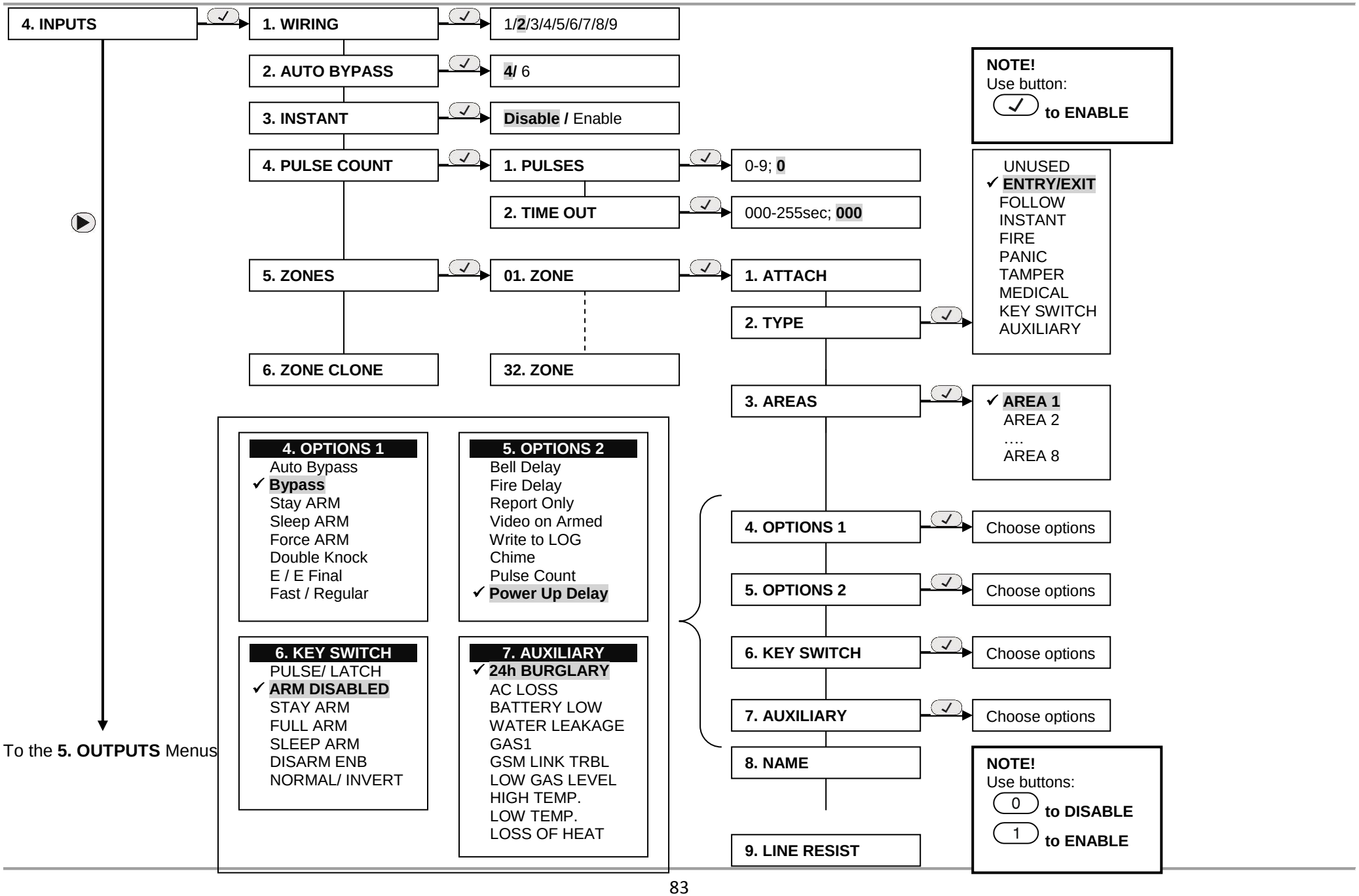
4. INPUTS
1. WIRING
1/2/3/4/5/6/7/8/9
2. AUTO BYPASS
4/ 6
3. INSTANT
Disable / Enable
4. PULSE COUNT
1. PULSES
0-9; 0
2. TIME OUT
000-255sec; 000
5. ZONES
01. ZONE
1. ATTACH
2. TYPE
UNUSED
ENTRY/EXIT
FOLLOW
INSTANT
FIRE
PANIC
TAMPER
MEDICAL
KEY SWITCH
AUXILIARY
3. AREAS
AREA 1
AREA 2
….
AREA 8
6. ZONE CLONE
32. ZONE
NOTE!
Use button:
to ENABLE
4. OPTIONS 1
Auto Bypass
Bypass
Stay ARM
Sleep ARM
Force ARM
Double Knock
E / E Final
Fast / Regular
5. OPTIONS 2
Bell Delay
Fire Delay
Report Only
Video on Armed
Write to LOG
Chime
Pulse Count
Power Up Delay
6. KEY SWITCH
PULSE/ LATCH
ARM DISABLED
STAY ARM
FULL ARM
SLEEP ARM
DISARM ENB
NORMAL/ INVERT
7. AUXILIARY
24h BURGLARY
AC LOSS
BATTERY LOW
WATER LEAKAGE
GAS1
GSM LINK TRBL
LOW GAS LEVEL
HIGH TEMP.
LOW TEMP.
LOSS OF HEAT
4. OPTIONS 1
Choose options
5. OPTIONS 2
Choose options
6. KEY SWITCH
Choose options
7. AUXILIARY
Choose options
8. NAME
9. LINE RESIST
NOTE!
Use buttons:
0 to DISABLE
1 to ENABLE
To the 5. OUTPUTS Menus

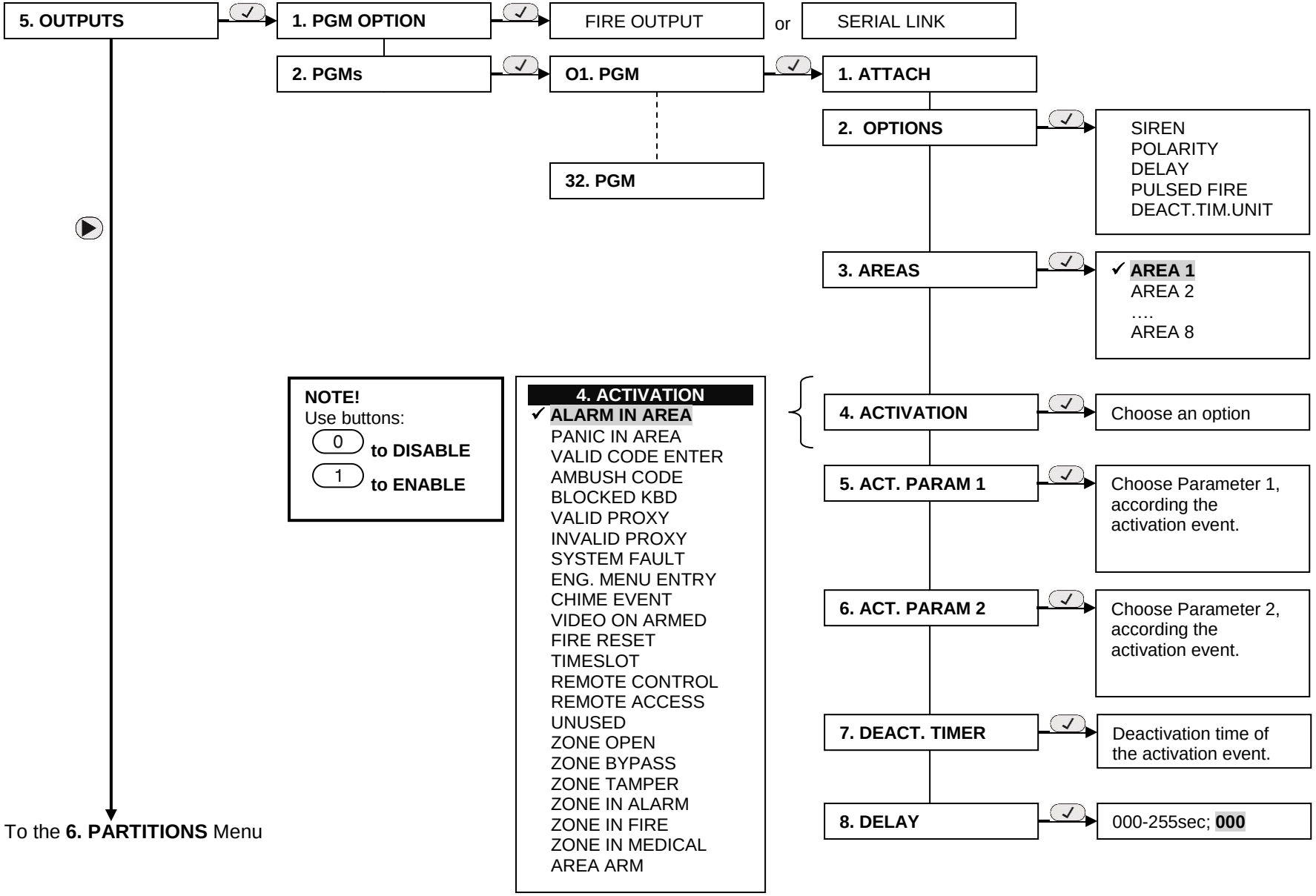
5. OUTPUTS
1. PGM OPTION
FIRE OUTPUT
or
SERIAL LINK
2. PGMs
O1. PGM
1. ATTACH
32. PGM
2. OPTIONS
SIREN
POLARITY
DELAY
PULSED FIRE
DEACT.TIM.UNIT
3. AREAS
✓ AREA 1
AREA 2
….
AREA 8
NOTE!
Use buttons:
0 to DISABLE
1 to ENABLE
4. ACTIVATION
✓ ALARM IN AREA
PANIC IN AREA
VALID CODE ENTER
AMBUSH CODE
BLOCKED KBD
VALID PROXY
INVALID PROXY
SYSTEM FAULT
ENG. MENU ENTRY
CHIME EVENT
VIDEO ON ARMED
FIRE RESET
TIMESLOT
REMOTE CONTROL
REMOTE ACCESS
UNUSED
ZONE OPEN
ZONE BYPASS
ZONE TAMPER
ZONE IN ALARM
ZONE IN FIRE
ZONE IN MEDICAL
AREA ARM
4. ACTIVATION
Choose an option
5. ACT. PARAM 1
Choose Parameter 1, according the activation event.
6. ACT. PARAM 2
Choose Parameter 2, according the activation event.
7. DEACT. TIMER
Deactivation time of the activation event.
8. DELAY
000-255sec; 000
To the 6. PARTITIONS Menu

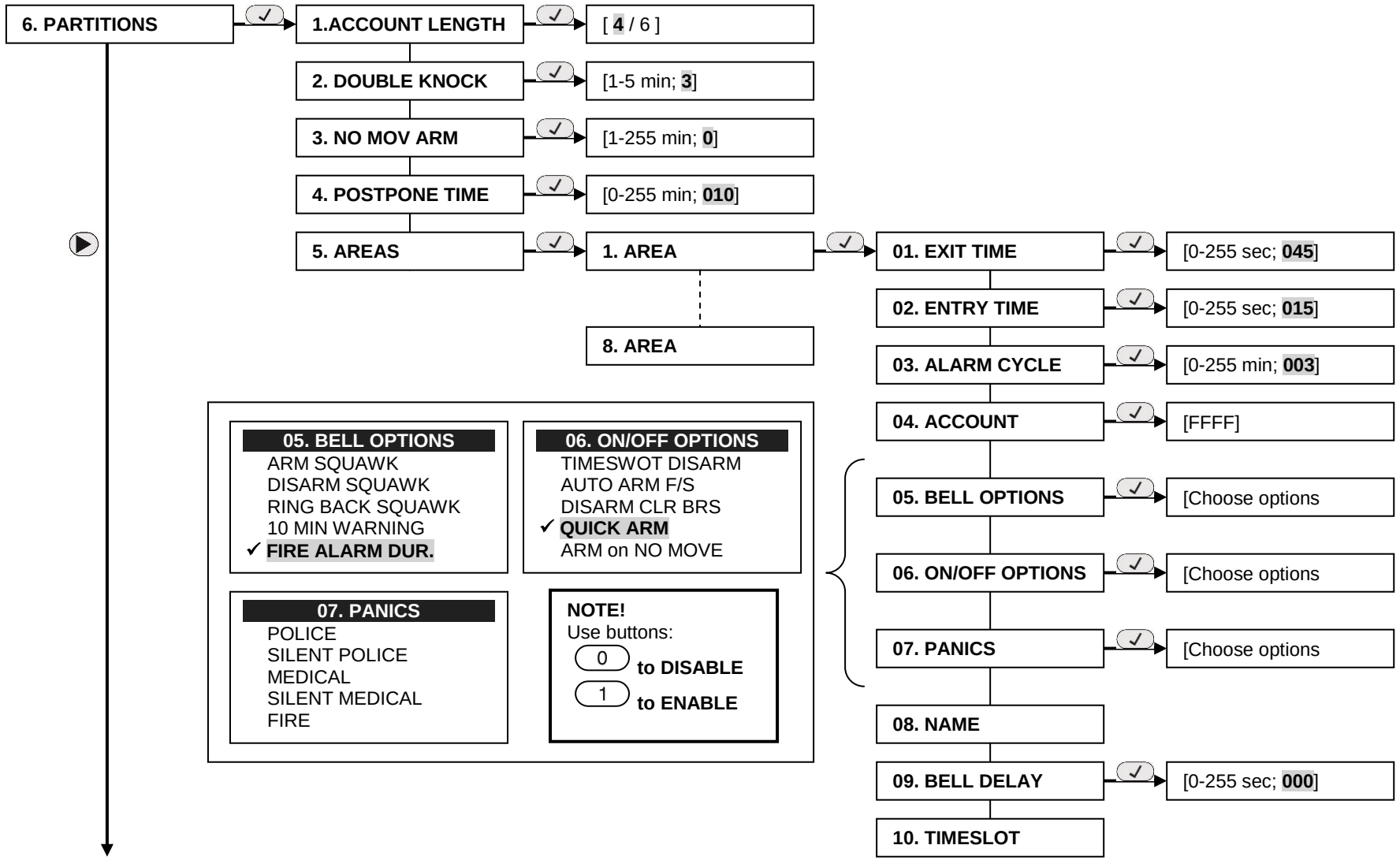

To the **7. SCHEDULES** Menu

Note: *The menus are available only for ECLIPSE 32 control panel.*

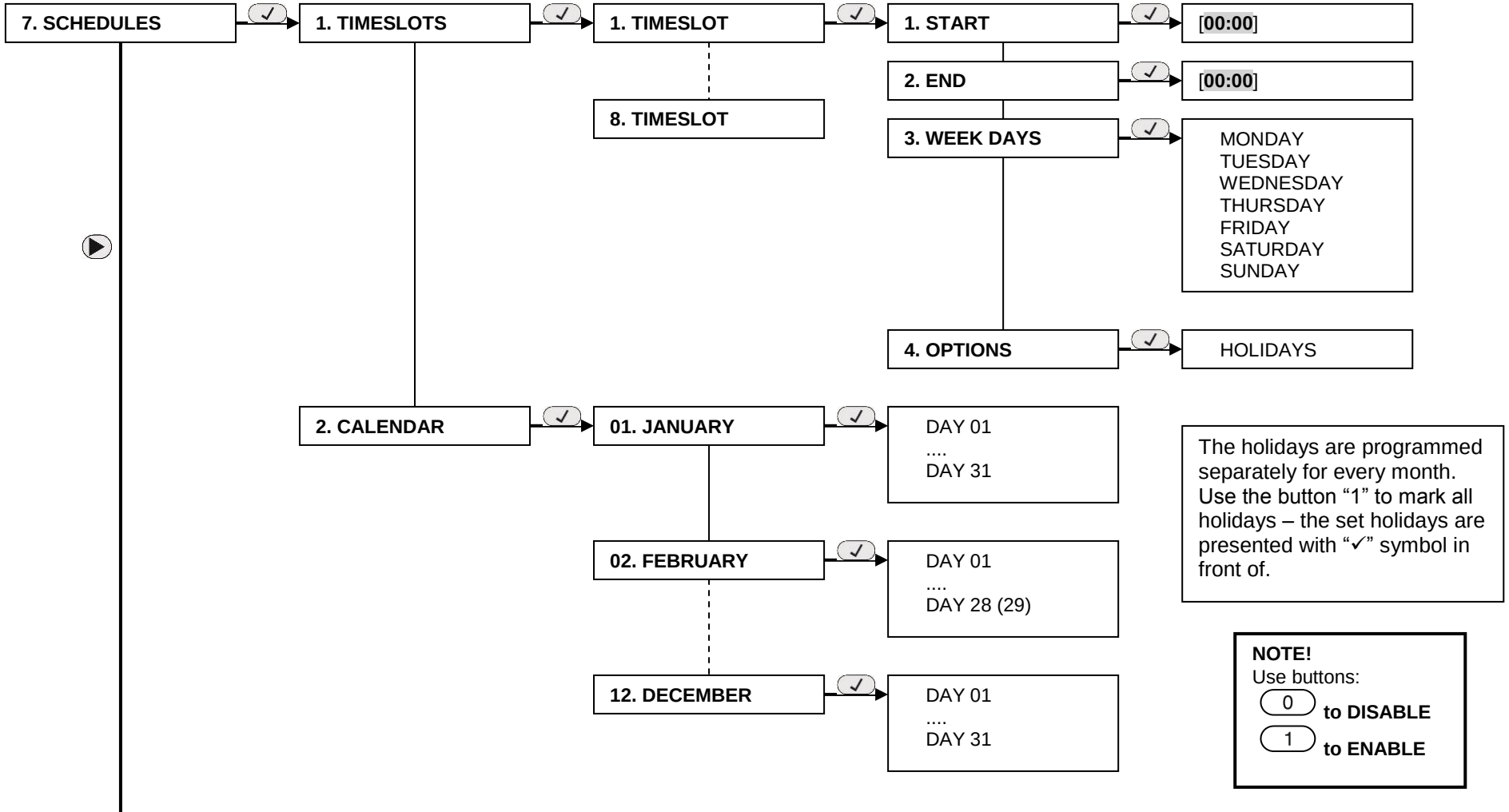

To the **8. COMMUNICATION** Menu

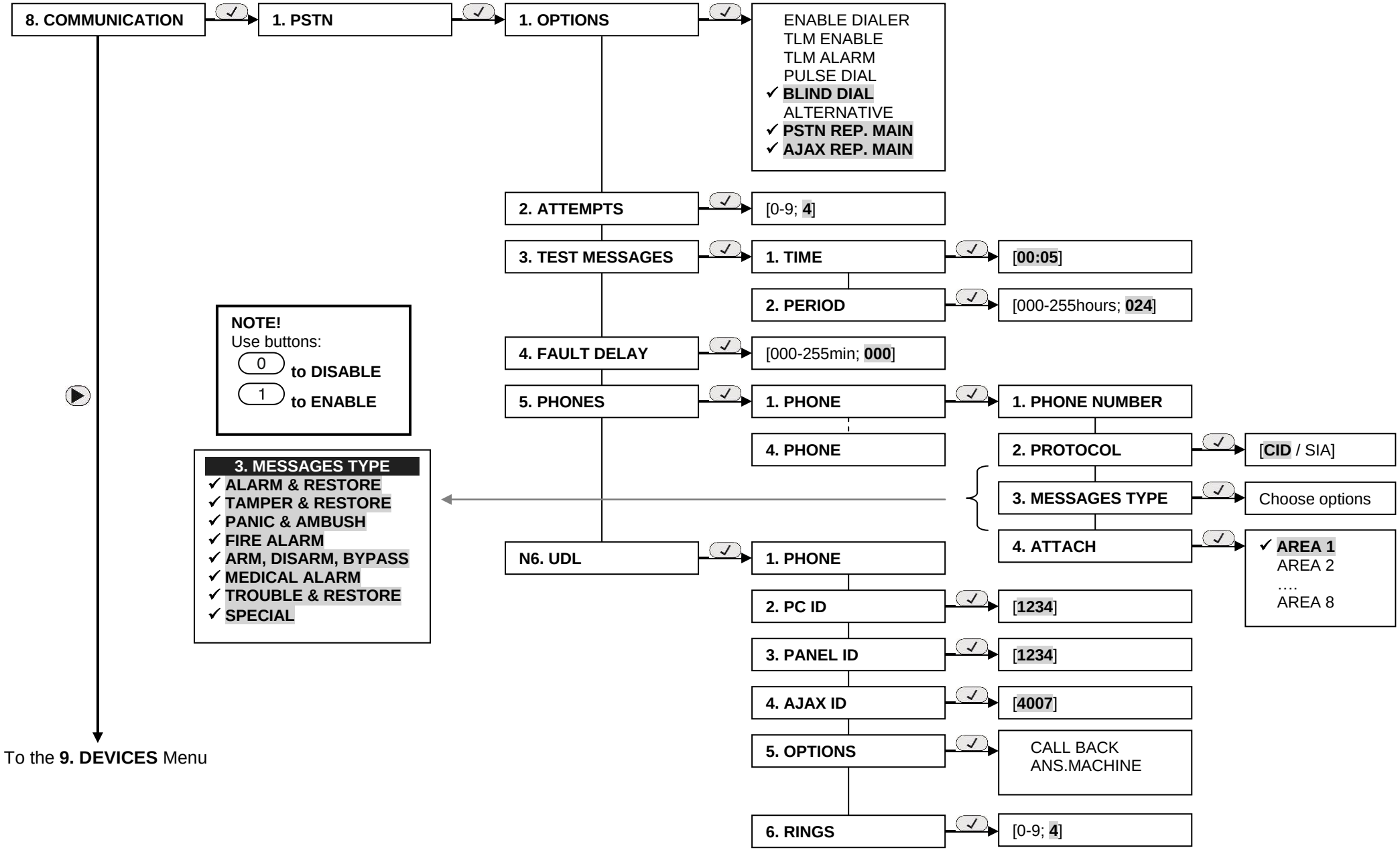
8. COMMUNICATION
1. PSTN
1. OPTIONS
ENABLE DIALER
TLM ENABLE
TLM ALARM
PULSE DIAL
✓ BLIND DIAL
ALTERNATIVE
✓ PSTN REP. MAIN
✓ AJAX REP. MAIN
2. ATTEMPTS
[0-9; 4]
3. TEST MESSAGES
1. TIME
[00:05]
2. PERIOD
[000-255hours; 024]
4. FAULT DELAY
[000-255min; 000]
5. PHONES
1. PHONE
1. PHONE NUMBER
4. PHONE
2. PROTOCOL
[CID / SIA]
3. MESSAGES TYPE
Choose options
4. ATTACH
✓ AREA 1
AREA 2
....
AREA 8
N6. UDL
1. PHONE
2. PC ID
[1234]
3. PANEL ID
[1234]
4. AJAX ID
[4007]
5. OPTIONS
CALL BACK
ANS.MACHINE
6. RINGS
[0-9; 4]
NOTE!
Use buttons:
0 to DISABLE
1 to ENABLE
3. MESSAGES TYPE
✓ ALARM & RESTORE
✓ TAMPER & RESTORE
✓ PANIC & AMBUSH
✓ FIRE ALARM
✓ ARM, DISARM, BYPASS
✓ MEDICAL ALARM
✓ TROUBLE & RESTORE
✓ SPECIAL
To the 9. DEVICES Menu

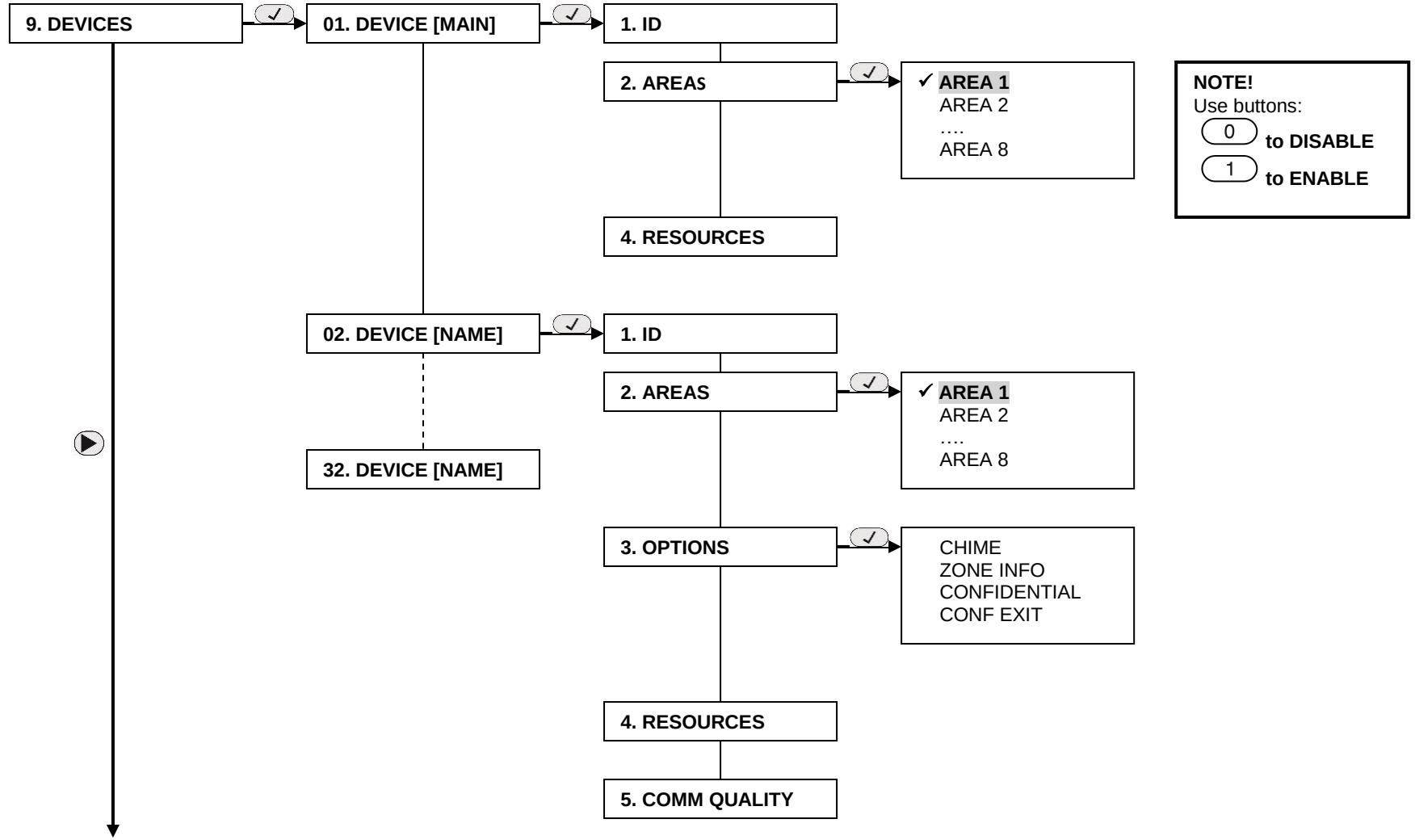

To the **1. MAINTENANCE** Menu

E. Style Diagrams for Zone Connection

(Available for ECLIPSE 32 control panel the Value is checked at ADDRESS 2zz9, where "zz" is a zone number 01-32)

LEGEND: "↙" means lower than value; "↗"means higher than value

SINGLE ZONE CONNECTION

❶ N.C. WITHOUT EOL

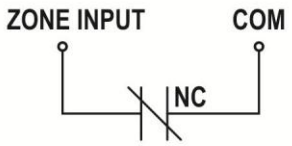

Value	Description
↙ 1.5 kΩ	The zone is closed
1.5 kΩ ↗	The zone is open

❷ N.C. WITH EOL

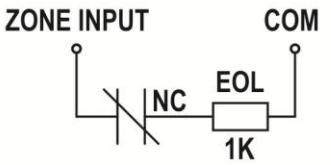

Value	Description
↙ 0.75 kΩ	Tamper short-circuit
0.75 - 1.5 kΩ	The zone is closed
1.5 kΩ ↗	The zone is open

❸ N.O. WITH EOL

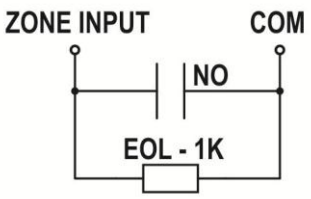

Value	Description
↙ 0.75 kΩ	The zone is open
0.75 - 1.5 kΩ	The zone is closed
1.5 kΩ ↗	Tamper break-off

❹ N.C. WITHOUT EOL, WITH TAMPER AND TAMPER RECOGNITION

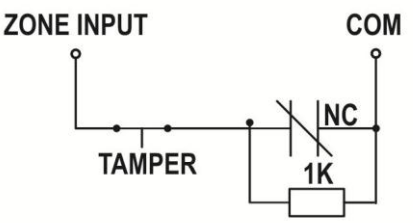

Value	Description
↙ 0.75 kΩ	The zone is closed
0.75 - 5.6 kΩ	The zone is open
5.6 kΩ ↗	Tamper break-off

❺ N.C. WITH EOL, WITH TAMPER AND WIRE FAULT RECOGNITION

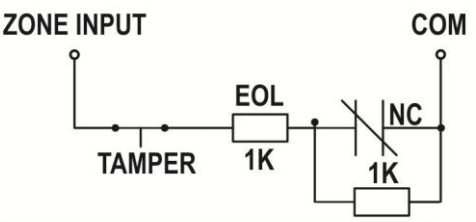

Value	Description
↙ 0.75 kΩ	Tamper short-circuit
0.75 - 1.5 kΩ	The zone is closed
1.5 - 5.6 kΩ	The zone is open
5.6 kΩ ↗	Tamper break-off

DOUBLING ZONE CONNECTION

❻ N.C. WITHOUT EOL

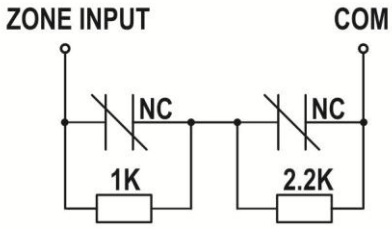

Value	Description
↙ 0.5 kΩ	The two zones are closed
0.5 - 1.5 kΩ	First zone open, second zone closed
1.5 - 2.7 kΩ	First zone closed, second zone open
2.7 kΩ - ∝	The two zones are open

❼ N.C. NO EOL, WITH TAMPER RECOGNITION

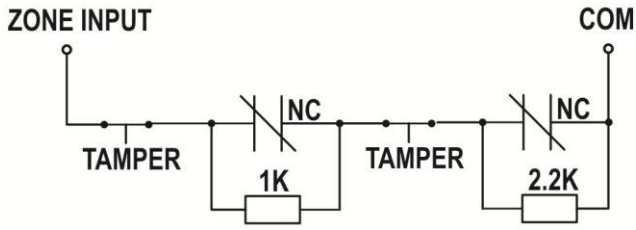

Value	Description
↙ 0.5 kΩ	The two zones are closed
0.5 - 1.5 kΩ	First zone open, second zone closed
1.5 - 2.7 kΩ	First zone closed, second zone open
2.7 - 4.9 kΩ	The two zones are open
4.9 kΩ ↗	Tamper break-off

❽ N.C. WITH EOL, WITH TAMPER RECOGNITION

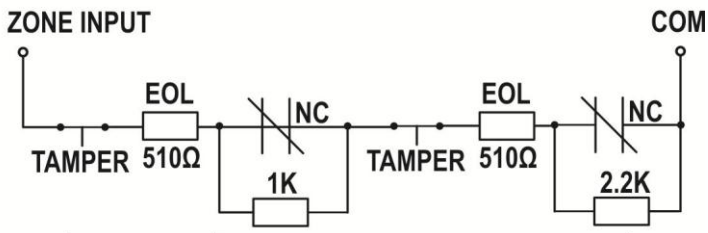

Value	Description
↙ 0.75 kΩ	Tamper short-circuit
0.75 - 1.5 kΩ	The two zones are closed
1.5 - 2.5 kΩ	First zone open, second zone closed
2.5 - 3.7 kΩ	First zone closed, second zone open
3.7 - 4.9 kΩ	The two zone are open
4.9 kΩ ↗	Tamper break-off

❾ N.C. WITHOUT EOL, WITHOUT TAMPER

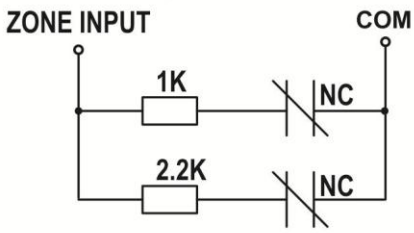

Value	Description
↙ 0.5 kΩ	Tamper short-circuit
0.5 - 0.75 kΩ	The two zones are closed
0.75 - 1.5 kΩ	First zone closed, second zone open
1.5 - 2.7 kΩ	First zone open, second zone closed
2.7 kΩ ↗	The two zones are open

F. ECLIPSE Series Control Panels – Main board Connection Diagrams

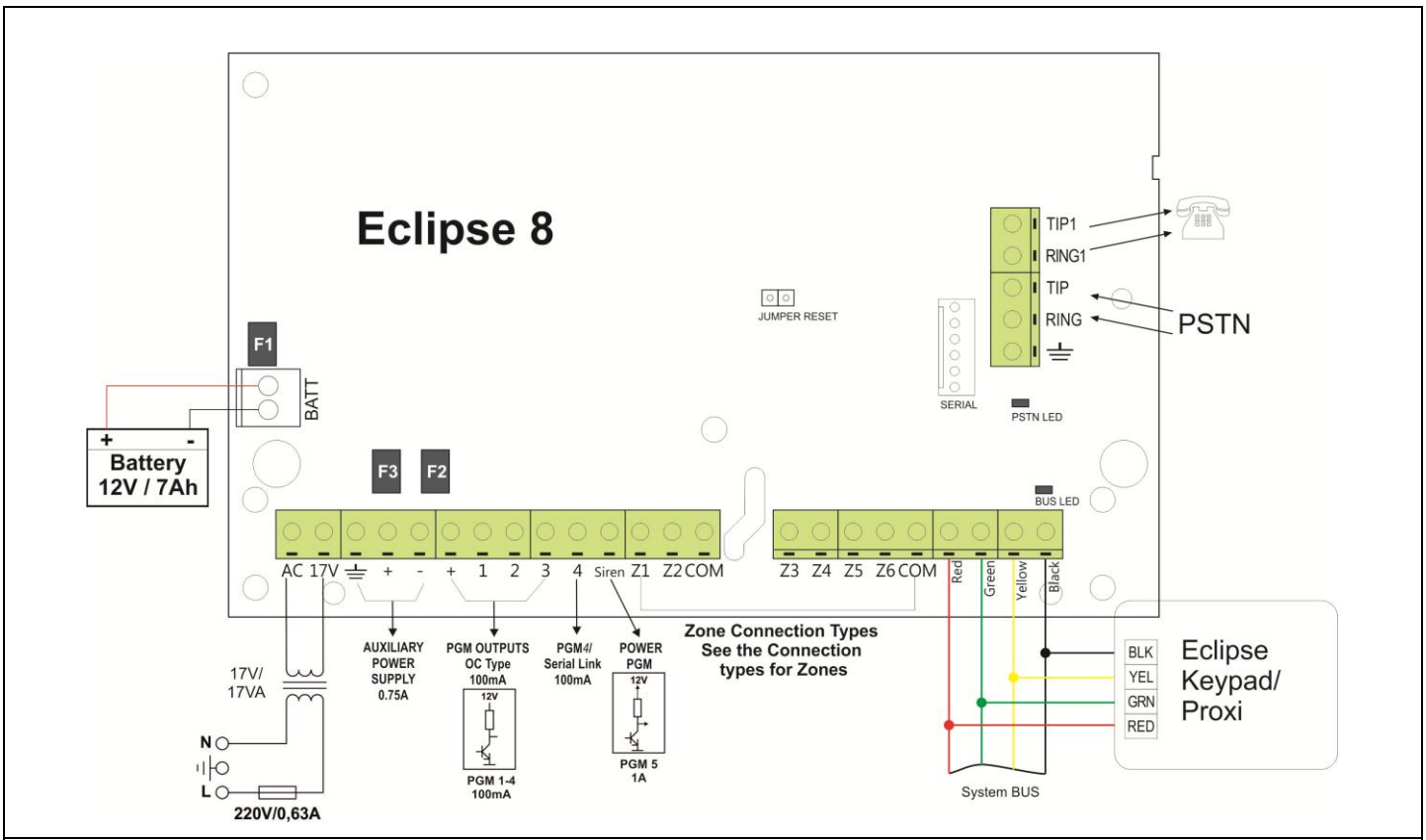

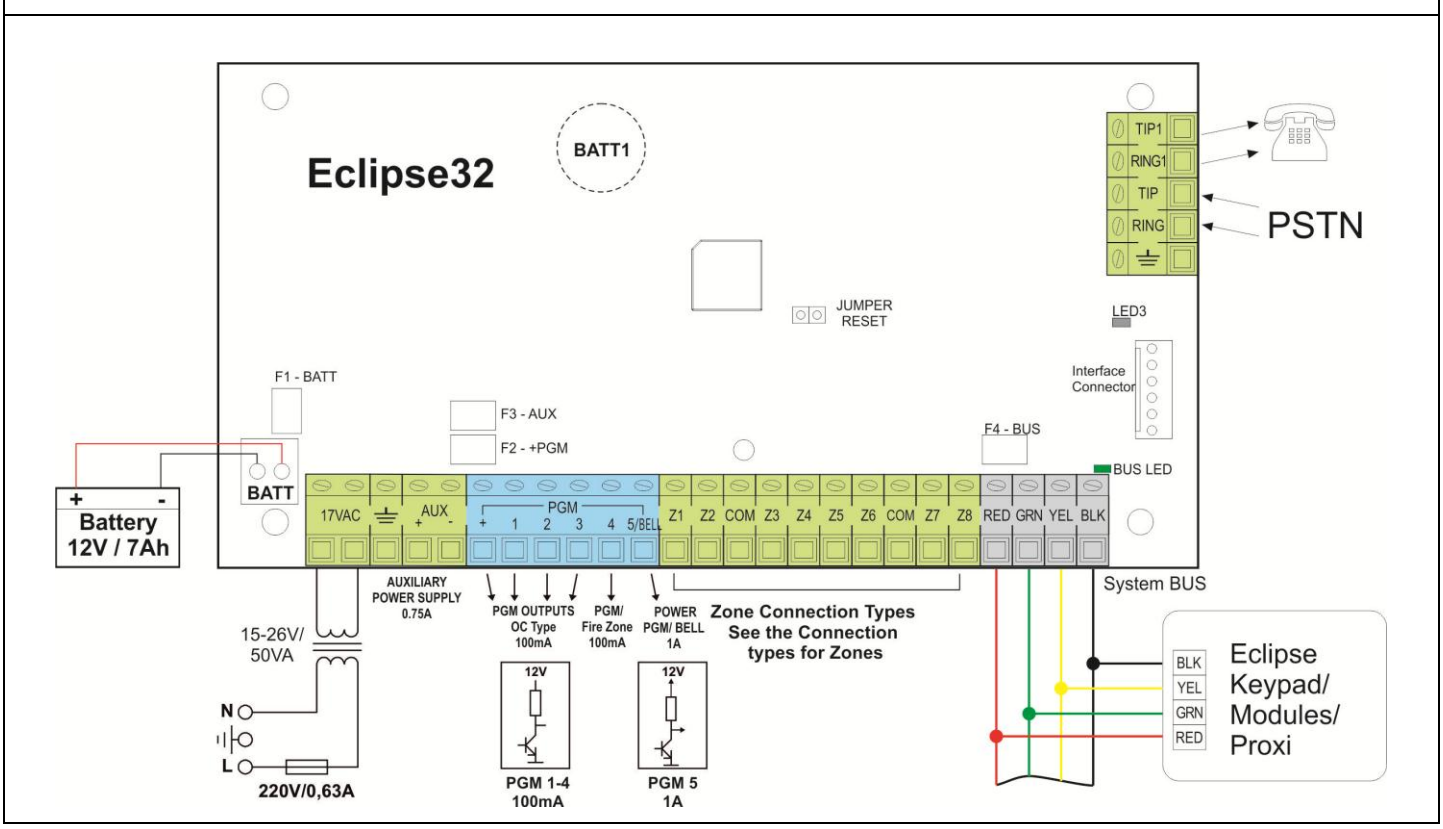

Teletek electronics

www.teletek-electronics.com

Address: Bulgaria, Sofia - 1407, 14A Srebarna Str.
Tel.: +359 2 9694 800, Fax: +359 2 962 52 13
e-mail: info@teletek-electronics.bg

18020737, Rev A, 01/ 2013